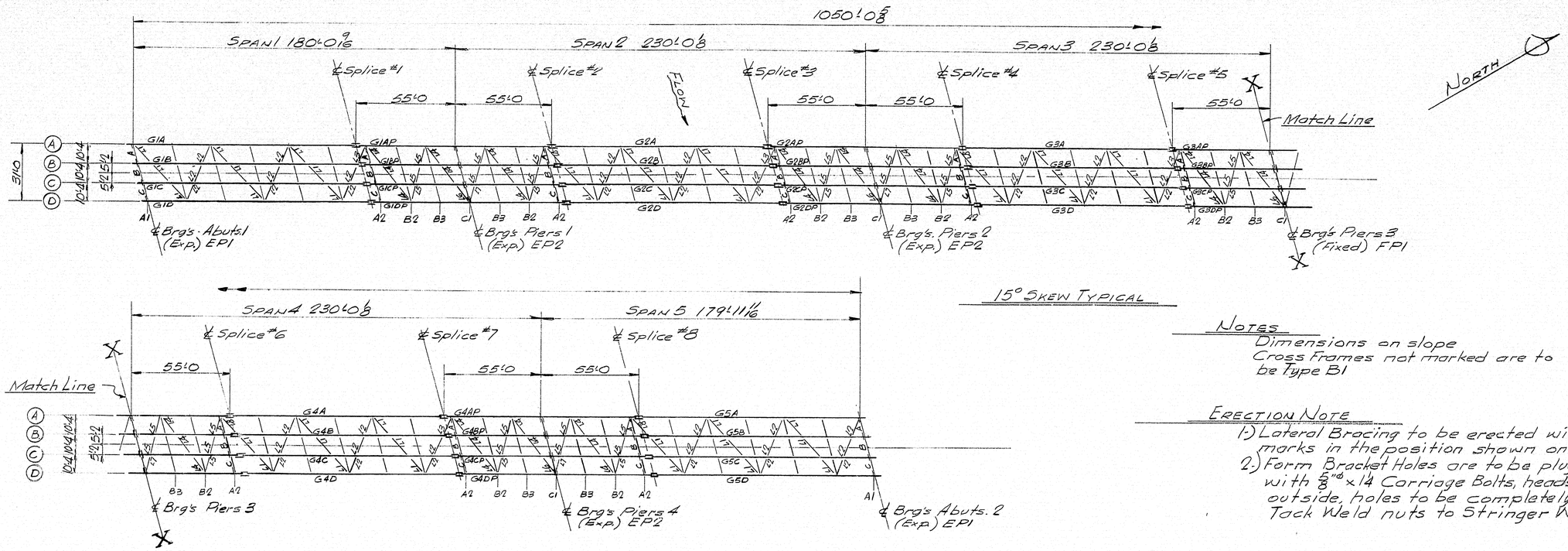

15° SKEW TYPICAL

NOTES

Dimensions on slope
Cross Frames not marked are to be Type B1

ERECTION NOTE

1.) Lateral Bracing to be erected with marks in the position shown on plan.
2.) Form Bracket Holes are to be plugged with 5/8"ϕ x 1¼ Carriage Bolts, heads on outside, holes to be completely covered. Tack Weld nuts to Stringer Web.

TYPICAL ERECTION PLAN - NORTHBOUND & SOUTHBOUND BRIDGES

NORTHBOUND: Suffix N to be added to all Marks
SOUTHBOUND: Suffix S to be added to all Marks

GENERAL NOTES

1.) Flange Pls & Web Pls of Haunched sections of girders over piers shall conform to A.S.T.M. Desig. A441. All other steel shall conform to A.S.T.M Desig. A36 High Tensile Strength Bolts A.S.T.M. Desig. A325. Pins A.S.T.M. A235 (Class E) or A108 (Grade 1021 to 1030)
2.) Girders are to be cambered in accordance with the details as shown.
3.) Girders are to be fitted with Shear Connectors in accordance with the details as shown.
4.) Welds for flange plate & web plate butts: Submerged Arc.
A441-Steel Linde Air Prod. Co. Unionmelt 5/32 #36 wire Grade 50 Flux.
A36-Steel do do 5/32 #29 do 50 do.
Web to flange fillets: Submerged Arc
A441 & A36 Steel-Linde Air Prod. Co. Unionmelt 5/32 #29 wire Grade 50 Flux.
Bearing Stiffeners: Submerged Arc.
A441 & A36-Steel-Lincoln Electric Co. 3/32 L60 wire-780 Flux.

Automatic or semi-automatic arc welding shall be certified by a letter of compliance that the electrode and flux are capable of producing weld metal having properties for the applicable base metal.

5.) The following non-destructive tests of the welded steel girders will be required.
A-Radiographic testing of shop butt welds.
B-Magnetic particle testing of shop welds, girder webs to flanges & bearing stiffeners to girder webs.
For additional information see supplemental specifications and Special Provisions.
6.) Flanges & webs are to be butt welded & inspected in accordance with the above specifications prior to being fillet welded to each other.
7.) Holes in field splices of continuous girders are to be sub-punched (or sub-drilled) and reamed while assembled in the shop and connecting parts to be match marked & bolted for shipment. (Bridge is on a constant grade.)
8.) Shop Paint shall be one coat of Red Lead per Maine Specs.
All steel shall be "Wheelabrator Cleaned."

Proj. No. I-95-9(29)

N.B. & S.B. BRIDGES	
ERECTION PLAN	
Bancroft & Martin Inc. South Portland 7, Maine	
I-95 OVER PENOBSCOT RIVER MEDWAY, MAINE	
CUSTOMER CALLAHAN BROS. INC.	
DESIGNER MAINE S.H.C. BRIDGE DIV.	
ORDER NO. VERBAL	DWG. NO 65-19-E1

APR 7-1-65

DRAWN	3-11-65	J.P.F.
REVISION		
REVISION		
REVISION		

98-21 (6)

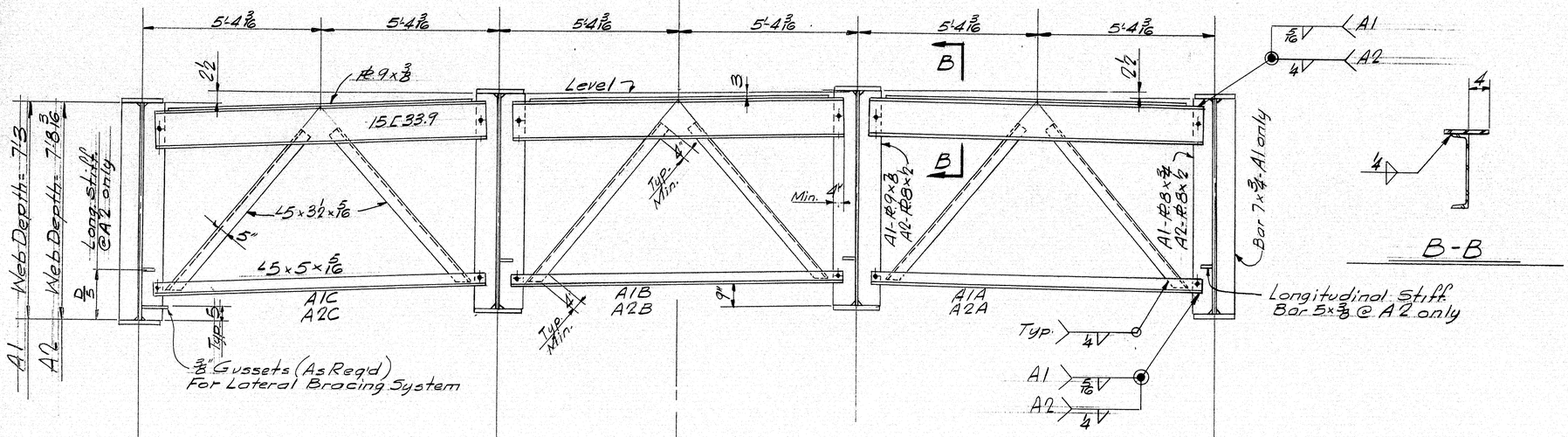

CROSS FRAMES - TYPE A

A1 & A2

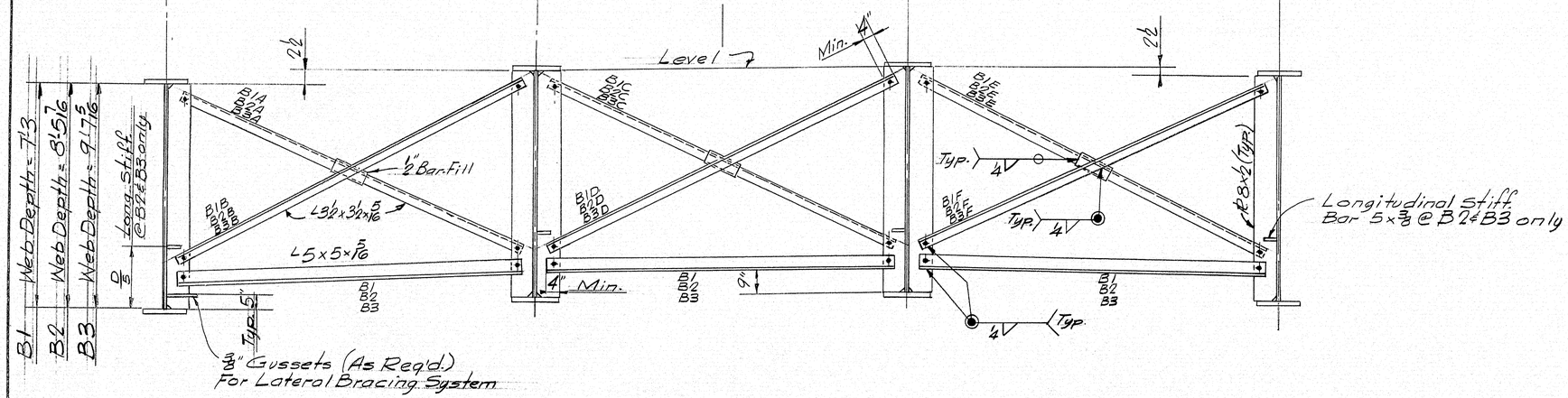

Erection Holes 13/16"ϕ - 3/4"ϕ M. Bolts.

CROSS FRAMES - TYPE B

B1 - B2 & B3

All Sections taken looking South & Parallel to ℄ Bearings

Proj. No. I-95-9(29)

N.B. & S.B. BRIDGES

CROSS FRAMES - TYPE A & B

Bancroft & Martin Inc.
South Portland 7, Maine

I-95 over PENOBSCOT RIVER
MEDWAY, MAINE

CUSTOMER CALLAHAN BROS. INC.
DESIGNER MAINE S.H.C. BRIDGE DIV.

ORDER NO. VERBAL DWG. NO 65-19-E2

DRAWN	3-1-65	J.P.F.
REVISION		
REVISION		
REVISION		

APP. 9-1-65

98-22

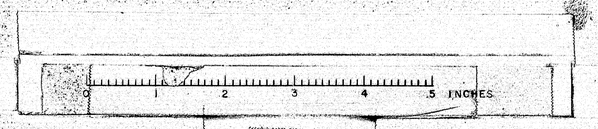

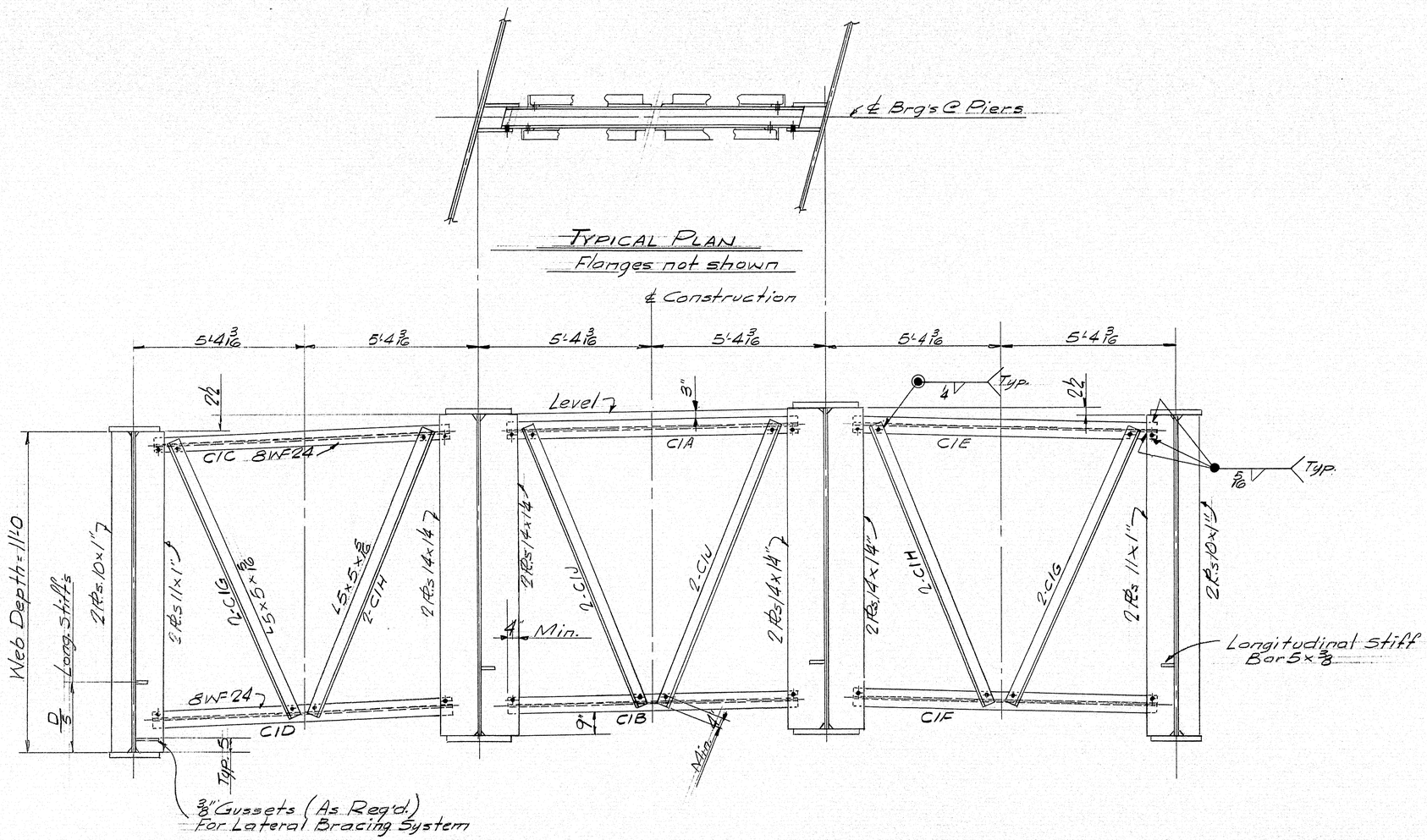

Erection Holes. 15/16"ϕ - 3/4"ϕ M. Bolts.

CROSS FRAMES - TYPE C
C1

Section taken looking South ⊥ Parallel to ℄ Bearings.

PROJ. No. I-95-9(29)

N.B. & S.B. BRIDGES

CROSS FRAMES - TYPE C

Bancroft & Martin Inc.
South Portland 7, Maine

I-95 OVER PENOBSCOT RIVER
MEDWAY, MAINE

CUSTOMER CALLAHAN BROS. INC.
DESIGNER MAINE S.H.C. BRIDGE DIV.

ORDER NO. VERBAL DWG. NO. 65-19-E3

DRAWN	3-12-65	J.P.F.
REVISION		
REVISION		
REVISION		

APP. 9-1-65

98-23

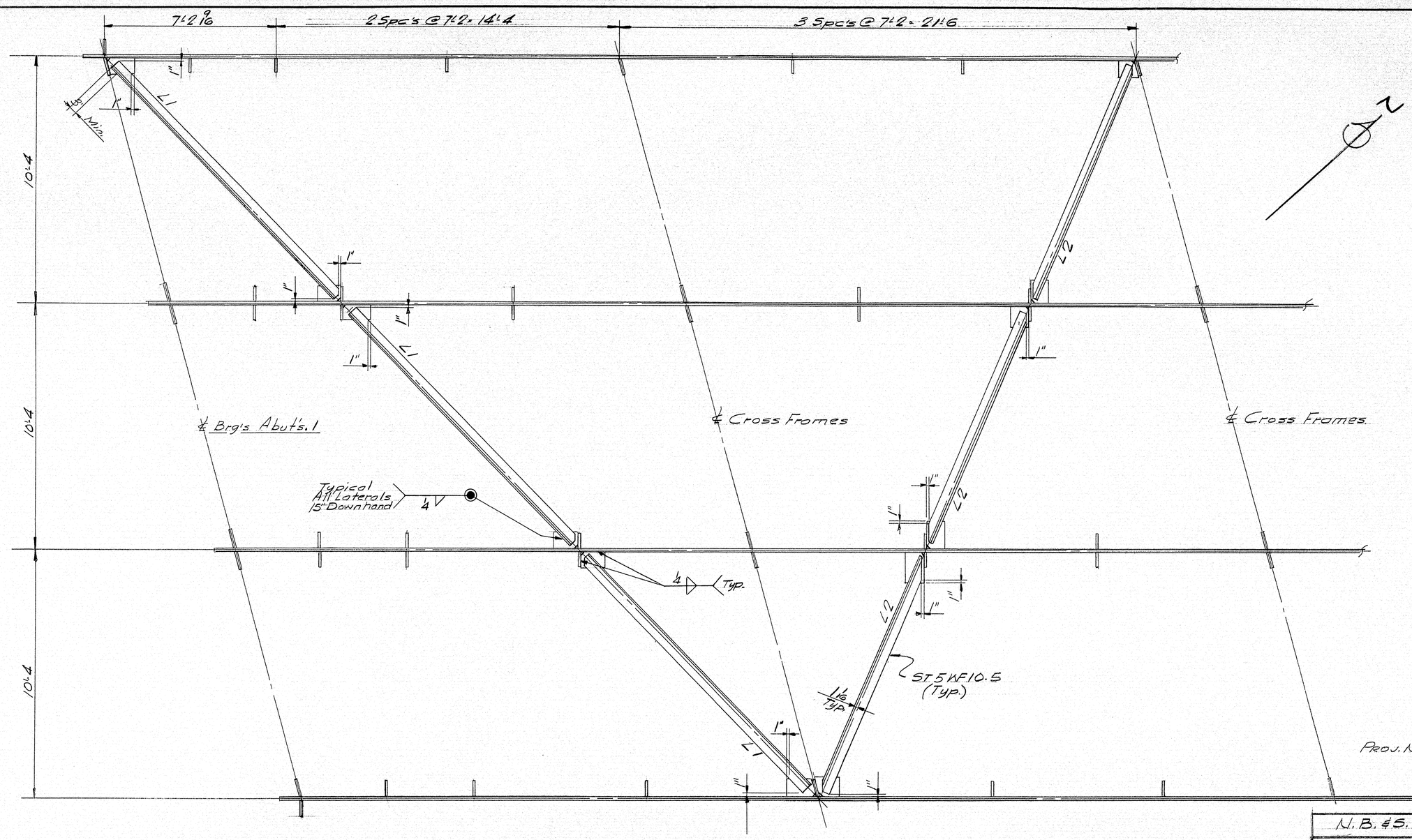

PROJ. No. I95-9(29)

PLAN - LATERAL BRACING @ ABUT'S 1

Cross Frames not shown.

All gussets 3/8" Pl.

N. B. & S. B. BRIDGES	
LATERAL BRACING @ ABUT'S. 1	
Bancroft & Martin Inc. South Portland 7, Maine	
I-95 OVER PENOBSCOT RIVER MEDWAY, MAINE	
CUSTOMER CALLAHAN BROS. INC. DESIGNER MAINE S. H. C. BRIDGE DIV.	
ORDER NO. VERBAL	DWG. NO. 65-19-E4

DRAWN	3-12-65	J.P.F.
REVISION		
REVISION		
REVISION		

APP. 9-1-65

98-24

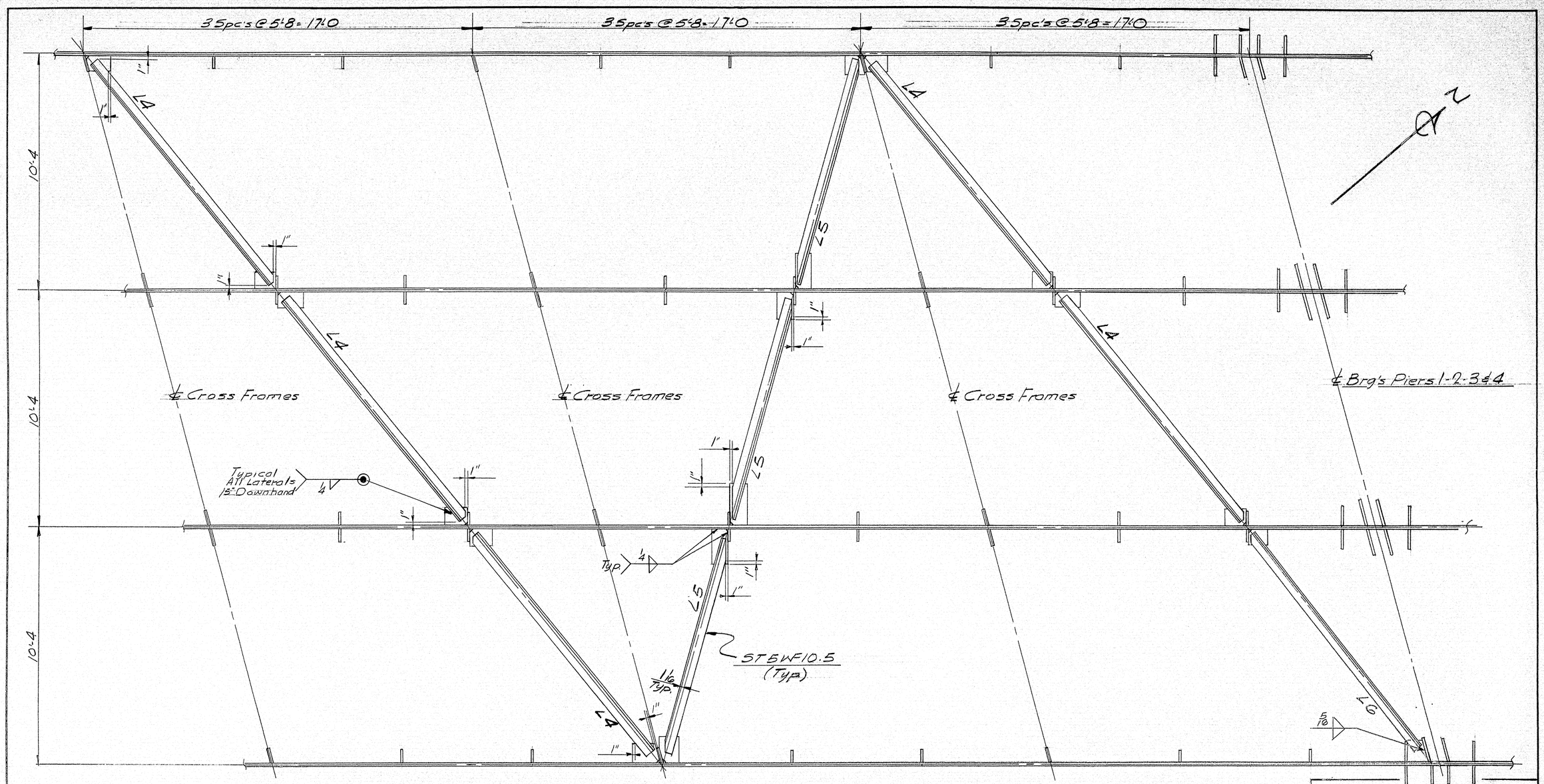

PLAN - LATERAL BRACING @ PIERS (South)

Cross Frames not shown.

All Gussets 3/8" Pl.

PROJ. No. I-95-9(29)

DRAWN	3-13-65	J.P.F.
REVISION		
REVISION		
REVISION		

N.B. & S.B. BRIDGES

LAT. BRACING @ PIERS (South)

Bancroft & Martin Inc.
South Portland 7, Maine

I-95 OVER PENOBSCOT RIVER
MEDWAY, MAINE

CUSTOMER CALLAHAN BROS. INC.
DESIGNER MAINE S.H.C. BRIDGE DIV.

ORDER NO. VERBAL DWG. NO. 65-19-25

APR. 9-1-65

98-25

0 1 2 3 4 5 INCHES

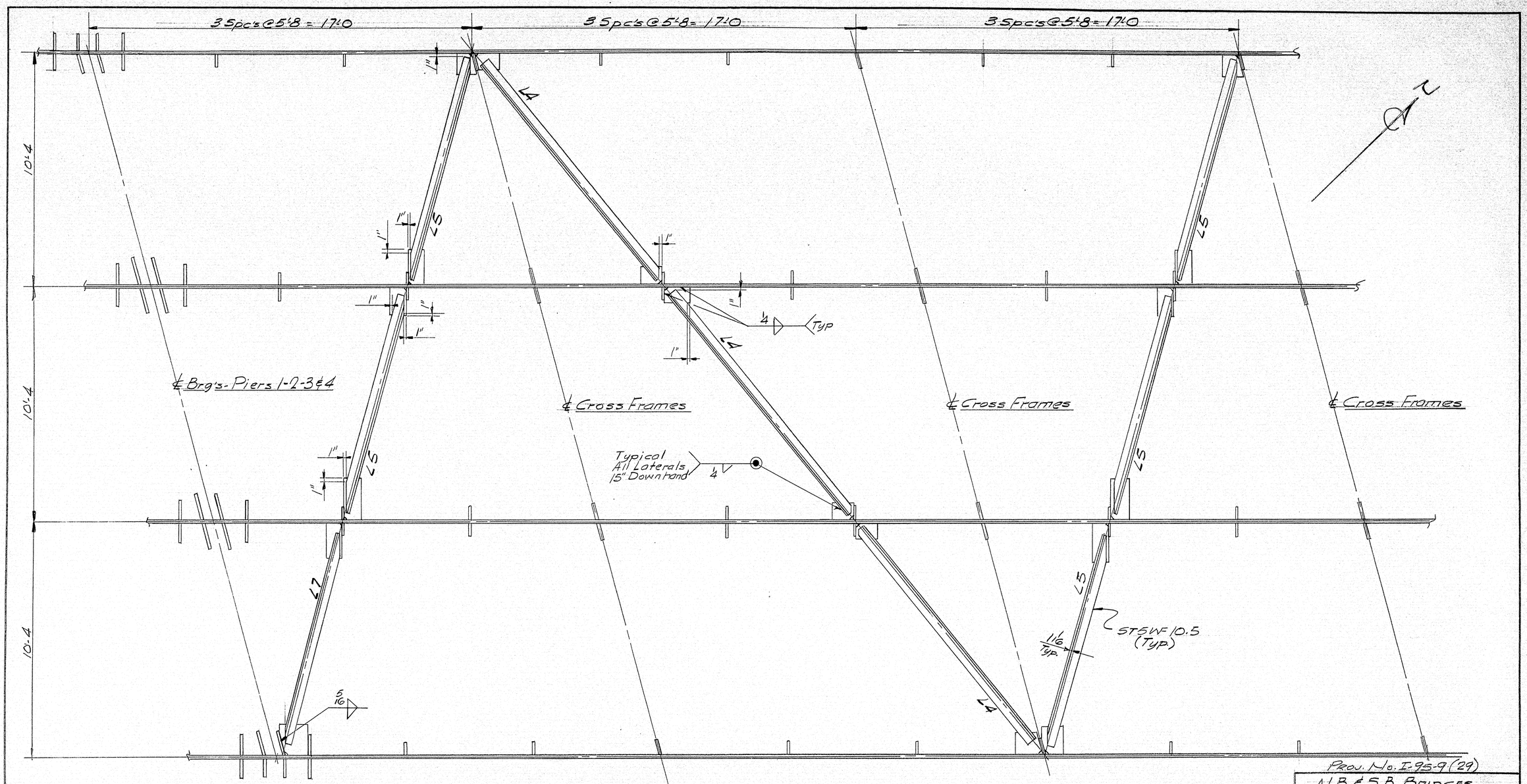

PLAN - LATERAL BRACING @ PIERS (North)

Cross Frames not shown.

All Gussets 3/8" PL

DRAWN	3-15-65	J.P.F.
REVISION		
REVISION		
REVISION		

PROJ. No. I-95-9(29)

N.B. & S.B. BRIDGES.

LAT. BRACING @ PIERS (North)

Bancroft & Martin Inc.
South Portland 7, Maine

I-95 OVER PENOBSCOT RIVER
MEDWAY, MAINE

CUSTOMER GALLAHAN BROS. INC.

DESIGNER MAINE S.H.C. BRIDGE DIV.

ORDER NO. VERBAL

DWG. NO. 65-19-E6

APP. 9-1-65

98-26

0 1 2 3 4 5 INCHES

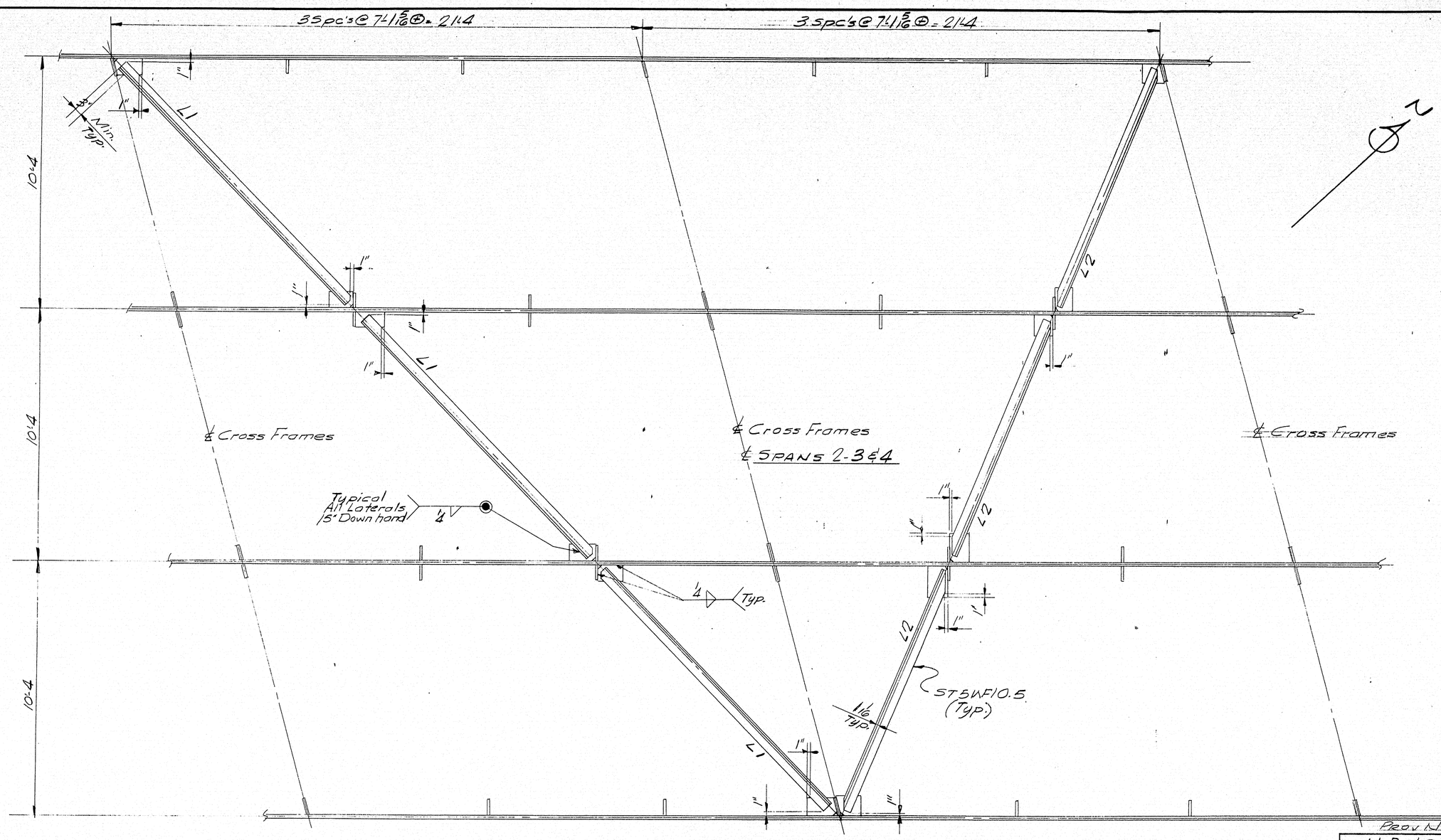

PLAN-LATERAL BRACING - ℄ OF SPANS 2-3 & 4

Cross Frames not shown.

All gussets 3/8" Pl.

Prov. No. I-95-9(29)

N.B. & S.B. BRIDGES

LAT. BRACING ℄ SPANS 2-3 & 4

Bancroft & Martin Inc.
South Portland 7, Maine

I-95 OVER PENOBSCOT RIVER
MEDWAY, MAINE

CUSTOMER CALLAHAN BROS. INC.
DESIGNER MAINE S.H.C. BRIDGE DIV.

ORDER NO. VERBAL DWG. NO. 65-19-E7

DRAWN	5-1-65	J.P.F.
REVISION		
REVISION		
REVISION		

APP. 9-1-65

98-27

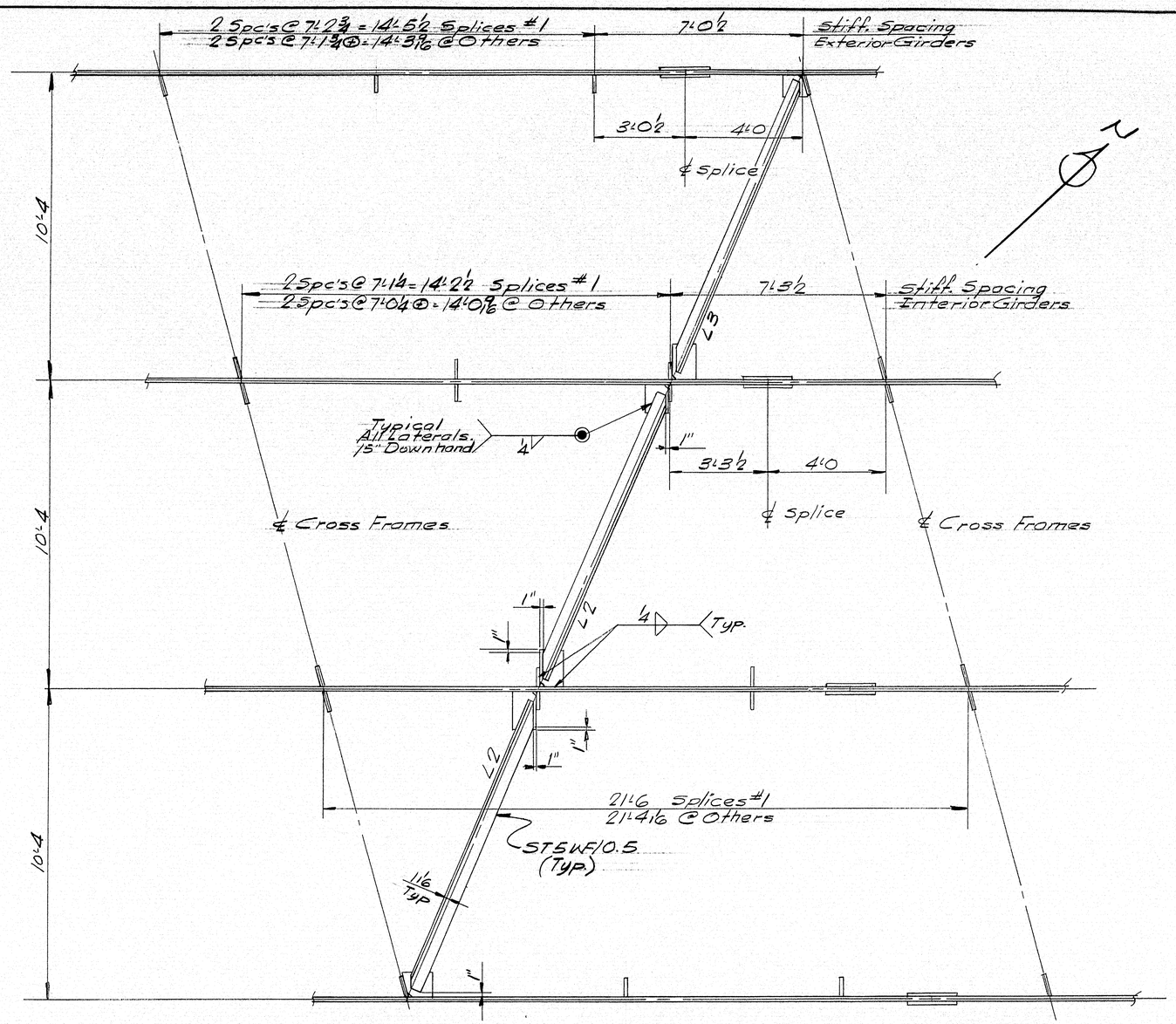

PLAN - LATERAL BRACING - SPLICES #1 - #3 - #5 & #7

Cross Frames not shown.

All gussets ⅜" Pl.

PROJ. No. I-95-9(29)

N.B. & S.B. BRIDGES

LAT. BRACING - SPLICES #1, #3, #5 & #7

Bancroft & Martin Inc.
South Portland 7, Maine

I-95 OVER PENOBSCOT RIVER
MEDWAY, MAINE

CUSTOMER CALLAHAN BROS. INC.
DESIGNER MAINE S.H.C. BRIDGE DIV.

ORDER NO. VERBAL DWG. NO. 65-19-EB

DRAWN	3-15-65	J.P.F.
REVISION		
REVISION		
REVISION		

APP. 9-1-65

98-28

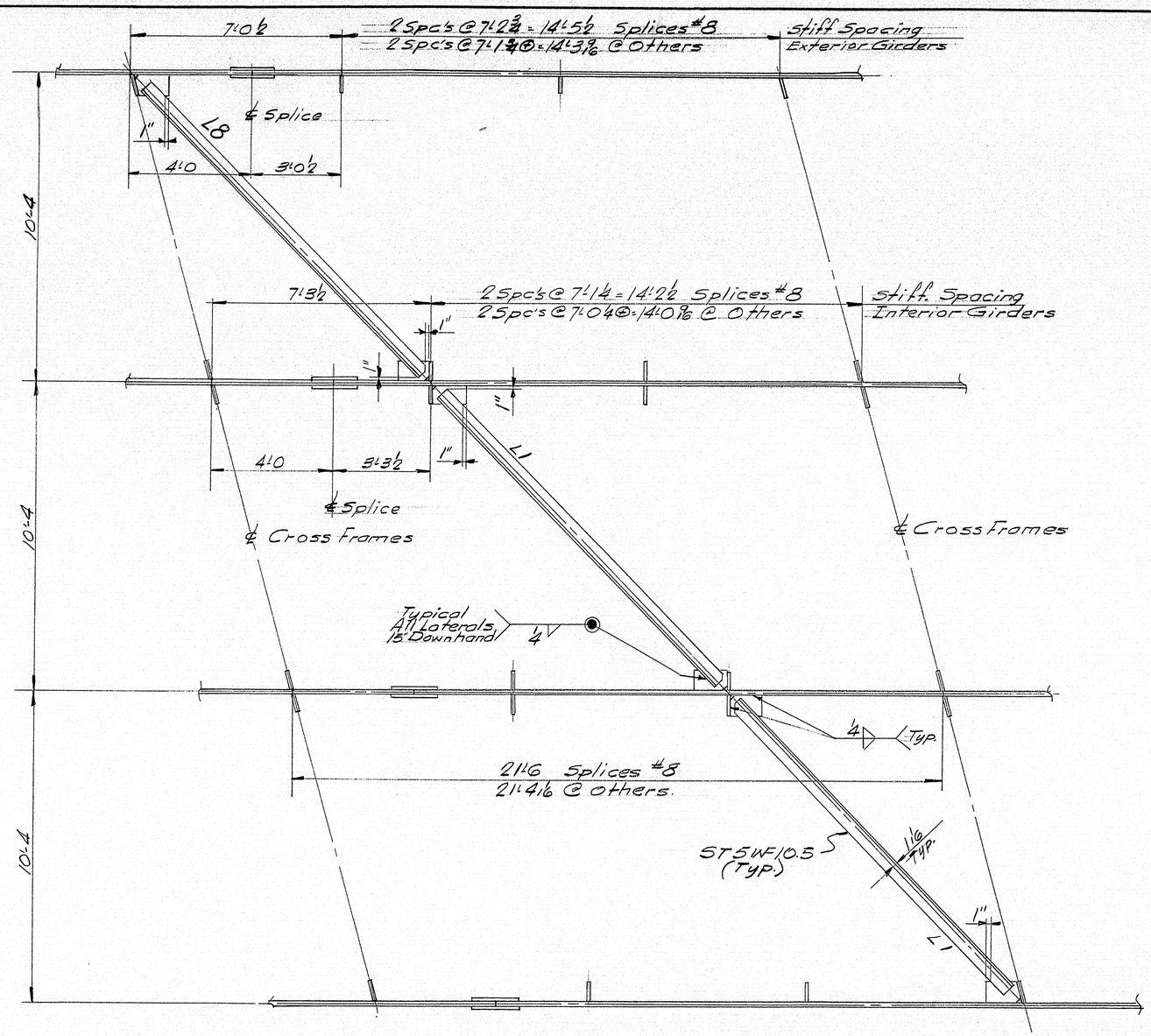

PLAN - LATERAL BRACING - SPLICES #2 - #4 - #6 & #8

Cross Frames not shown

All gussets ⅜" Pl.

PROJ. No. I-95-9(29)

N.B. & S.B. BRIDGES

LAT. BRACING - SPLICES #2 & #4 - #6 & #8

Bancroft & Martin Inc.
South Portland 7, Maine

I-95 OVER PENOBSCOT RIVER
MEDWAY, MAINE

CUSTOMER CALLAHAN BROS. INC.
DESIGNER MAINE S.H.C. BRIDGE DIV.

ORDER NO. VERBAL | DWG. NO. 65-19-E9

DRAWN	3-16-65	J.P.F.
REVISION		
REVISION		
REVISION		

APP 9-1-65

98-29

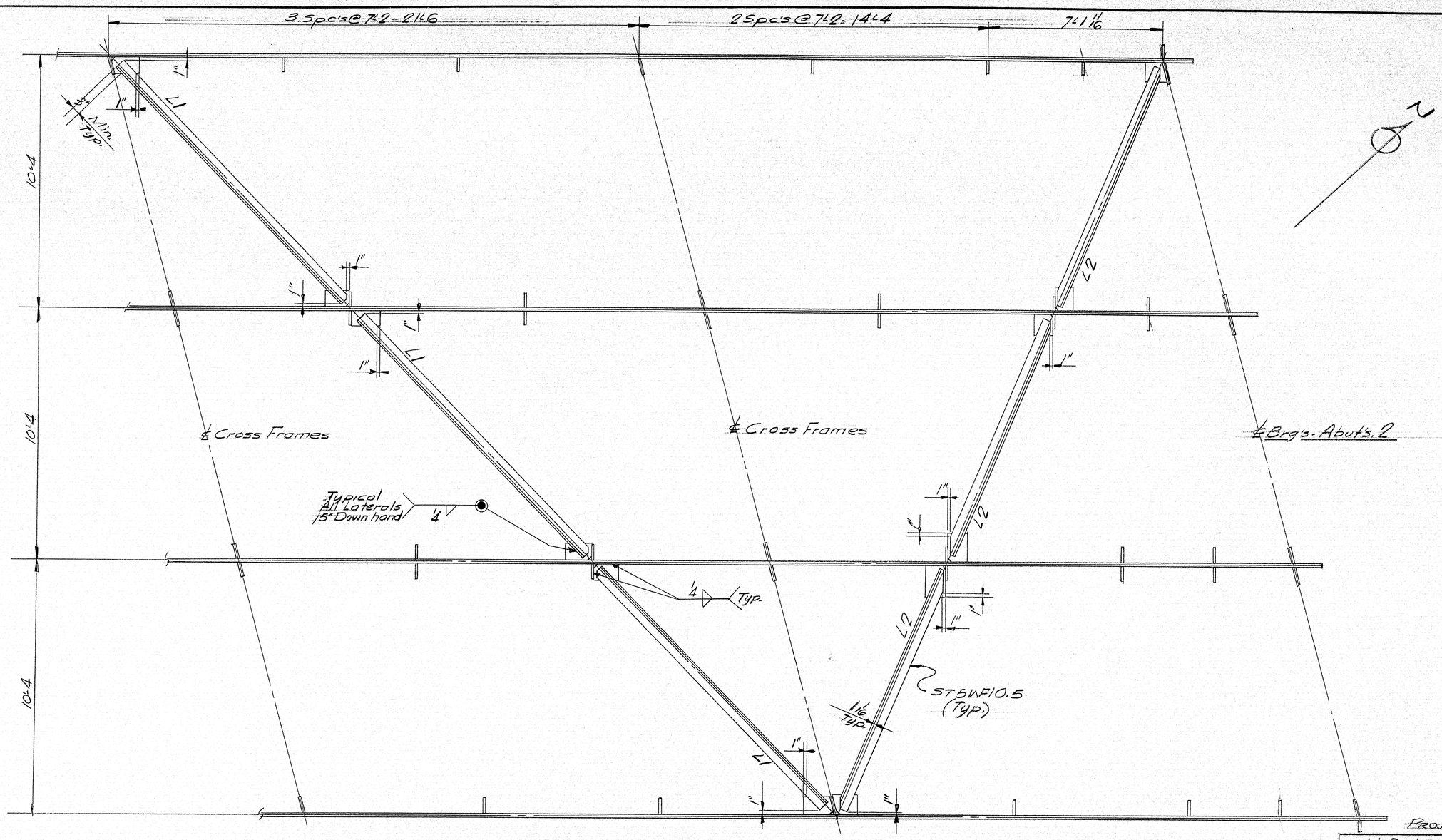

PLAN - LATERAL BRACING @ ABUT'S 2

Cross Frames not shown.

All gussets 3/8" ℄.

PROJ. No. I-95-9(29)

N.B. & S.B. BRIDGES

LATERAL BRACING @ ABUTS. 2

Bancroft & Martin Inc.
South Portland 7, Maine

I-95 OVER PENOBSCOT RIVER
MEDWAY, MAINE

CUSTOMER CALLAHAN BROS. INC.
DESIGNER MAINE S.H.C. BRIDGE DIV.

ORDER NO. VERBAL DWG. NO. 65-19-E10

DRAWN	5-16-65	J.P.F.
REVISION		
REVISION		
REVISION		

APP. 9-1-65

98-30

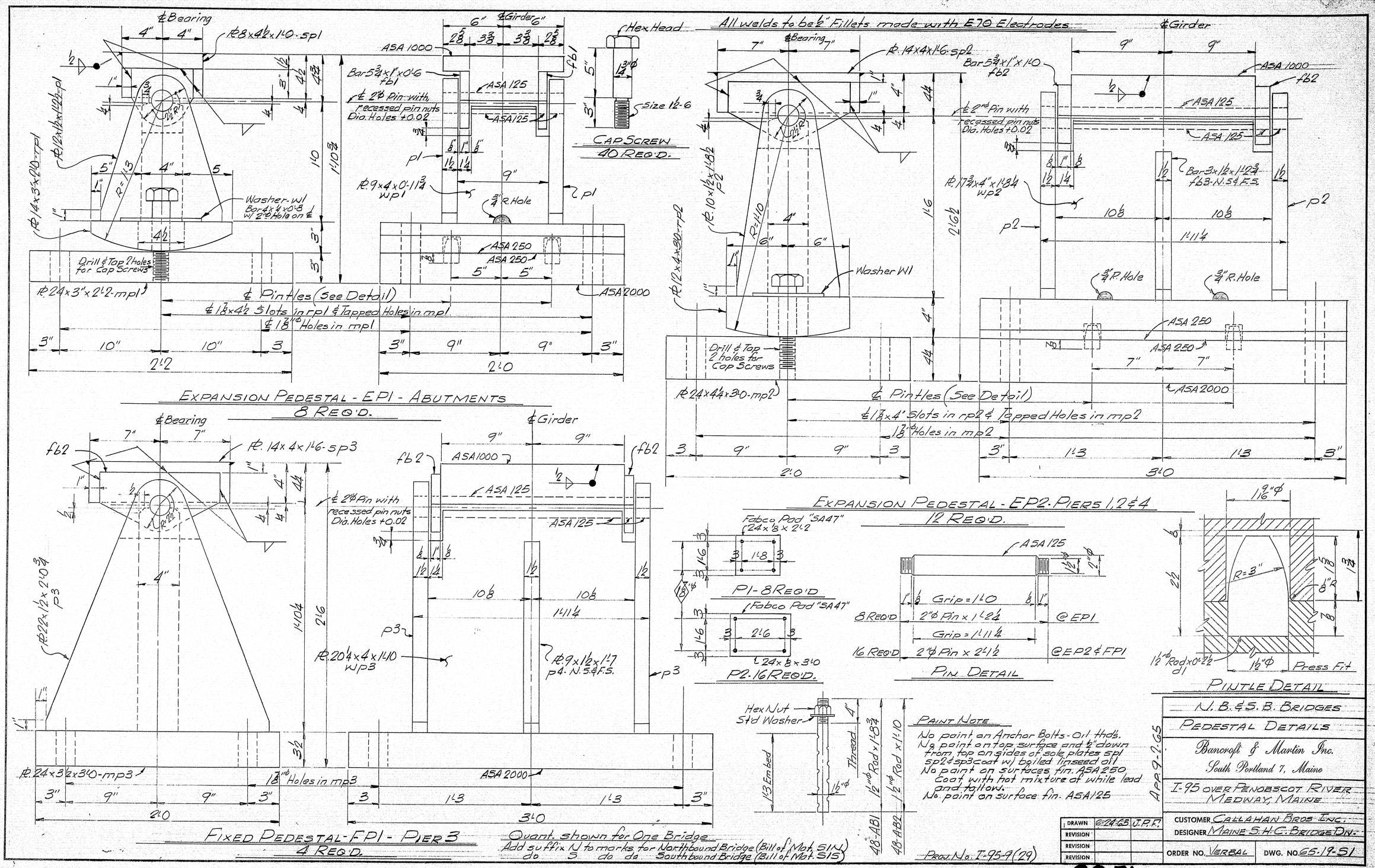
All welds to be ½" Fillets made with E70 Electrodes
EXPANSION PEDESTAL - EP1 - ABUTMENTS
8 REQ'D.
CAP SCREW
40 REQ'D.
EXPANSION PEDESTAL - EP2 - PIERS 1, 2 & 4
12 REQ'D.
P1 - 8 REQ'D
P2 - 16 REQ'D.
PIN DETAIL
PINTLE DETAIL
FIXED PEDESTAL - FP1 - PIER 3
4 REQ'D.
Quant. shown for One Bridge
Add suffix N to marks for Northbound Bridge (Bill of Mat. S1N)
do S do do Southbound Bridge (Bill of Mat. S1S)
PAINT NOTE
No paint on Anchor Bolts - Oil thds.
No paint on top surface and ½" down from top on sides of sole plates sp1 & sp3 coat w/ boiled linseed oil
No paint on surfaces fin. ASA 250
Coat with hot mixture of white lead and tallow.
No. paint on surface fin. ASA 125
N. B. & S. B. BRIDGES
PEDESTAL DETAILS
Bancroft & Martin Inc.
South Portland 7, Maine
I-95 OVER PENOBSCOT RIVER
MEDWAY, MAINE
CUSTOMER CALLAHAN BROS. INC.
DESIGNER MAINE S.H.C. BRIDGE DIV.
ORDER NO. VERBAL
DWG. NO. 65-19-S1
DRAWN 6-24-65 J.P.F.
REVISION
REVISION
REVISION
PROJ. NO. I-95-9(29)
98-31

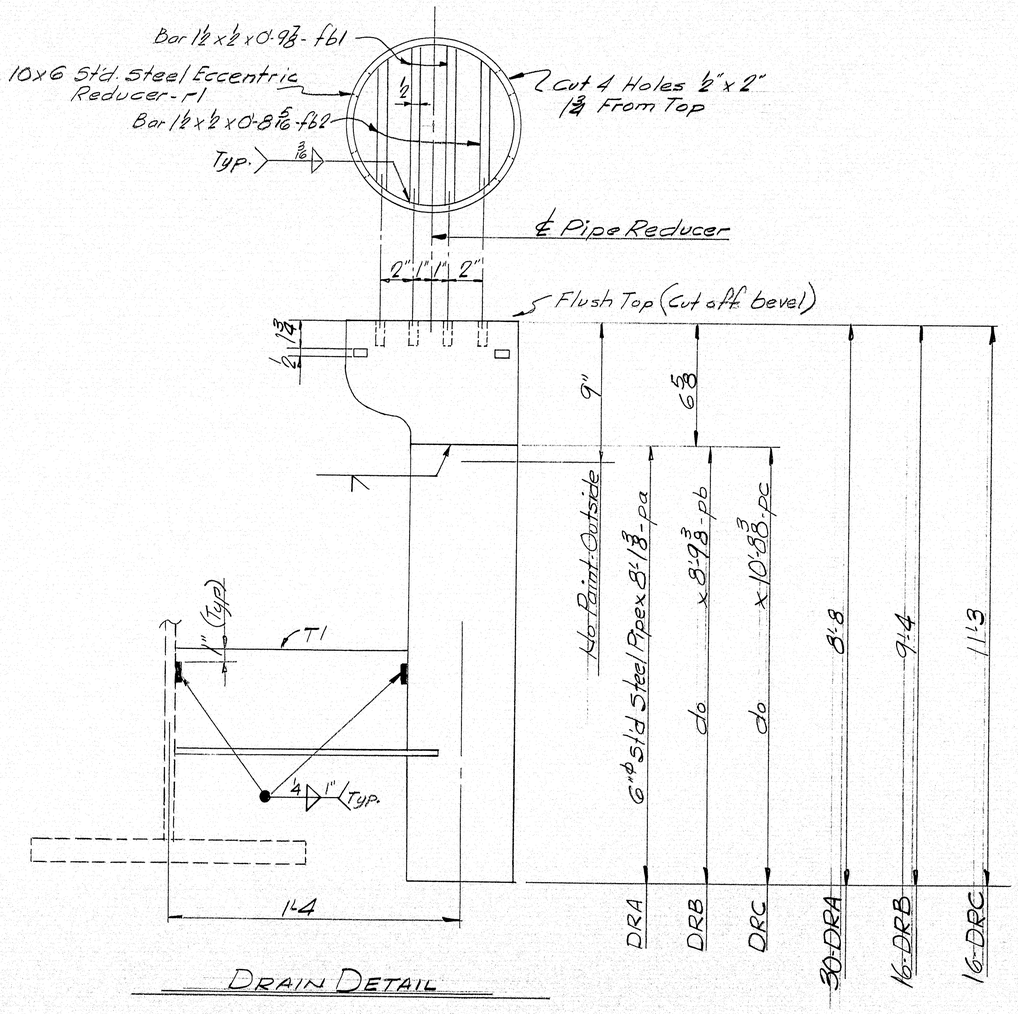

DRAIN DETAIL

For location of drains see State Dwg's.

Quantities shown are for One Bridge
Add suffix N to marks for Northbound Bridge (Bill of Mat. S 2N)
do S do do Southbound Bridge (Bill of Mat. S 2S)

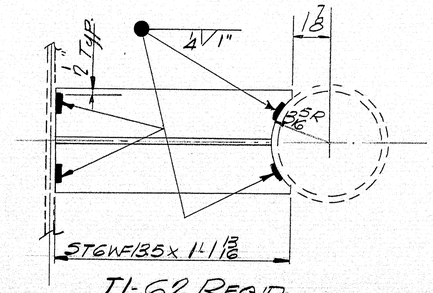

T1-62 REQ'D.
No Point

SHOP CONN: Welded
FIELD CONN: Welded
PAINT: Red Lead per Maine Specs & As Noted.

PROJ. No. I-95-9(29)

N.B. & S.B. BRIDGES

DRAIN DETAILS

Bancroft & Martin Inc.
South Portland 7, Maine

I-95 OVER PENOBSCOT RIVER
MEDWAY, MAINE

APR. 9-2-65

DRAWN	6-23-65	J.P.F.	CUSTOMER CALLAHAN BROS. INC.
REVISION			DESIGNER MAINE S.H.C. BRIDGE DIV.
REVISION			ORDER NO. VERBAL DWG. NO 65-19-S2
REVISION			

98-32

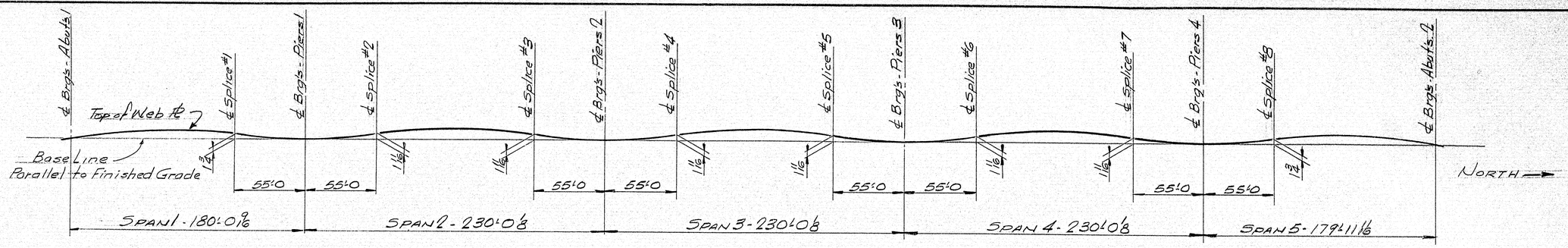

SHOP ASSEMBLY DIAGRAM
For All Girder Lines

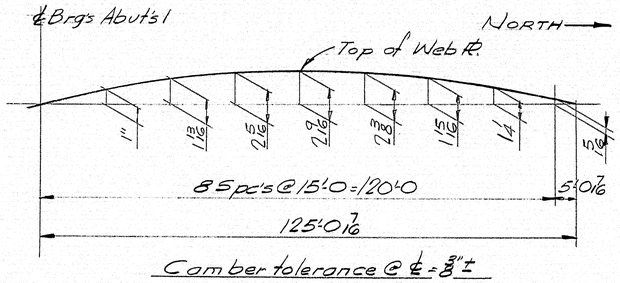

Camber tolerance @ ℄ = 3/8" ±

GIRDERS G1A, G1B, G1C & G1D

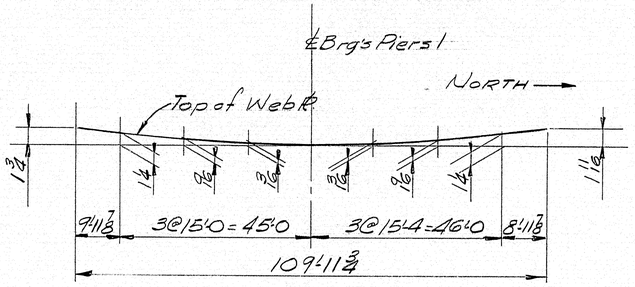

Camber tolerance @ ℄ = 3/8" ±

GIRDERS G1AP, G1BP, G1CP & G1DP

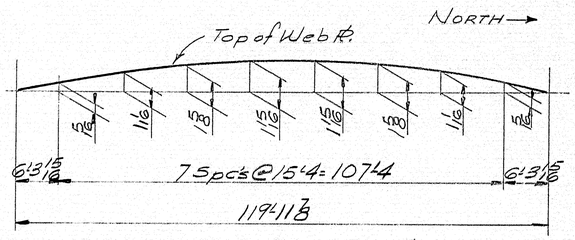

Camber tolerance @ ℄ = 3/8" ±

GIRDERS G2A, G2B, G2C & G2D
G3A, G3B, G3C & G3D
G4A, G4B, G4C & G4D

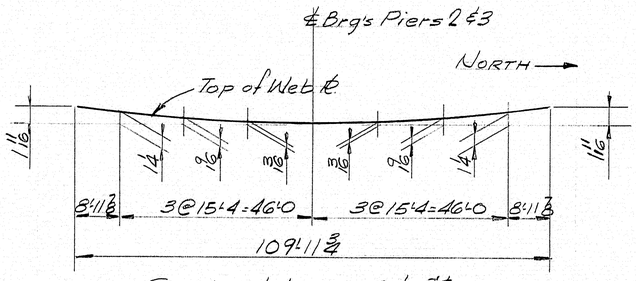

Camber tolerance @ ℄ = 3/8" ±

GIRDERS G2AP, G2BP, G2CP & G2DP
G3AP, G3BP, G3CP & G3DP

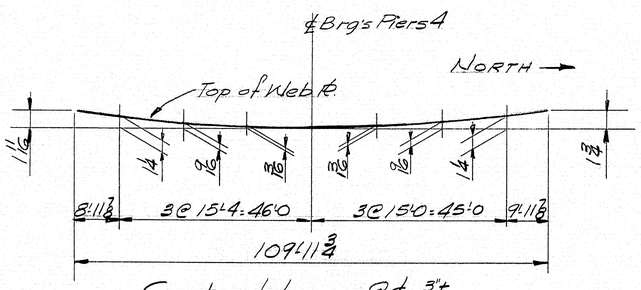

Camber tolerance @ ℄ = 3/8" ±

GIRDERS G4AP, G4BP, G4CP & G4DP

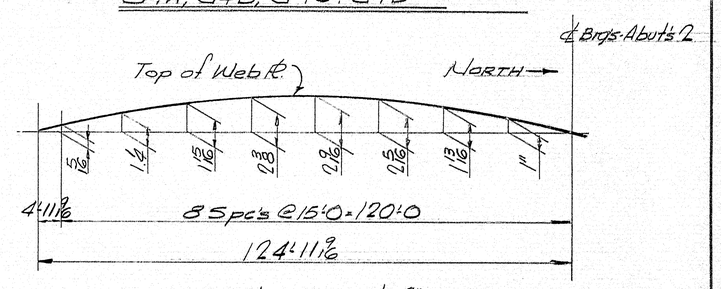

Camber tolerance @ ℄ = 3/8" ±

GIRDERS G5A, G5B, G5C & G5D

CAMBER DIAGRAMS

Cambers shown are finished cambers.
No allowances shown for shrinkage due to welding.
The ends of girders shall be cut normal to a working base line unless otherwise detailed.

Proj. No. I-95-9(29)

APP. 9-1-65

N.B. & S.B. BRIDGES
CAMBER DIAGRAMS
Bancroft & Martin Inc.
South Portland 7, Maine
I-95 OVER PENOBSCOT RIVER
MEDWAY, MAINE

DRAWN	3-17-65	J.P.F.
REVISION		
REVISION		
REVISION		

CUSTOMER CALLAHAN BROS. INC.
DESIGNER MAINE S.H.C. BRIDGE DIV.
ORDER NO. VERBAL
DWG. NO. 65-19-53

98-33

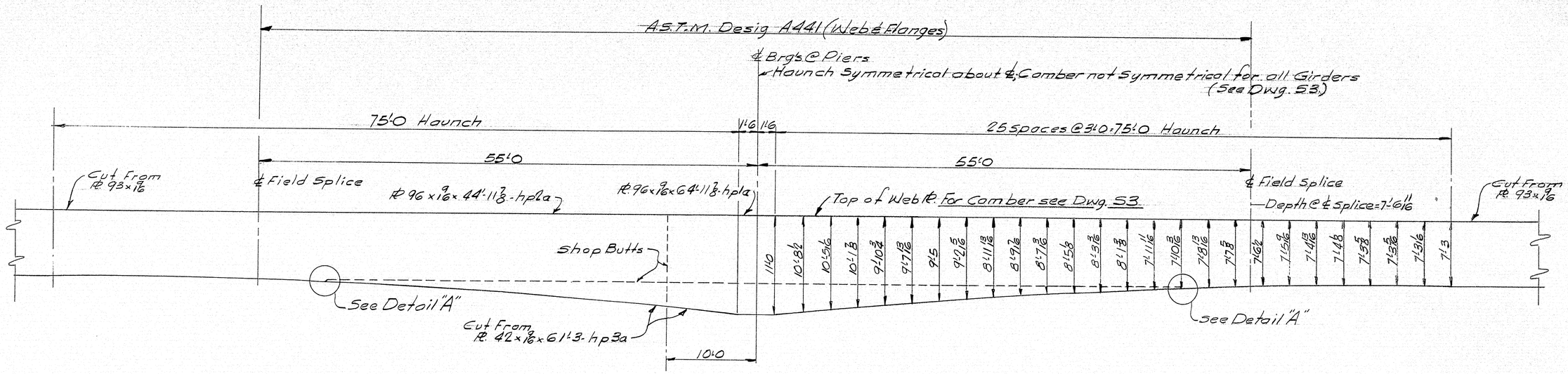

Ends of Plates to be normal to a working base line.
For Welding see Dwg S6

HAUNCH DETAIL

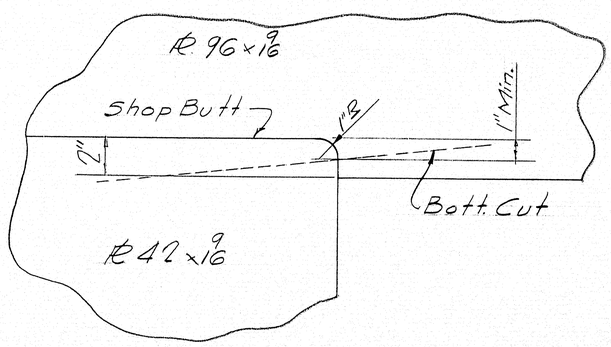

Detail "A"

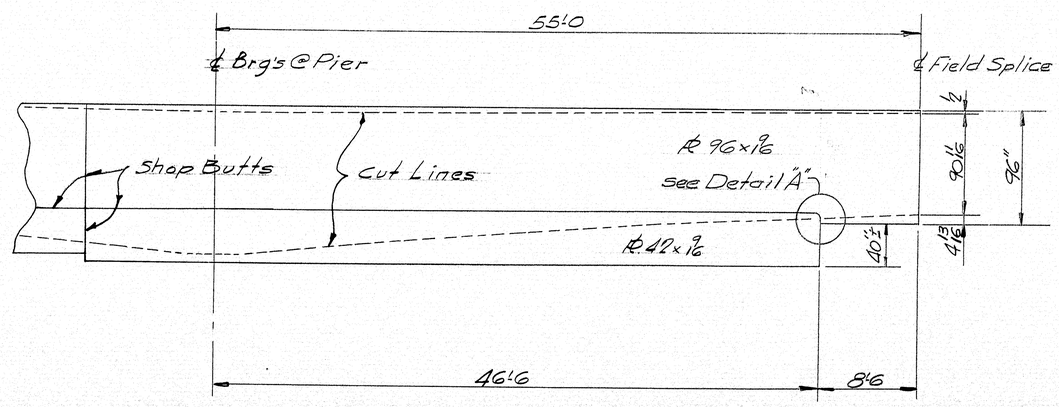

Web Assembly Detail

DRAWN	3-17-65	J.P.R.
REVISION		
REVISION		
REVISION		

PROV. No. I-95-9(29)

N.B. & S.B. BRIDGES

HAUNCH DETAIL

Bancroft & Martin Inc.
South Portland 7, Maine

I-95 OVER PENOBSCOT RIVER
MEDWAY, MAINE

CUSTOMER CALLAHAN BROS. INC.
DESIGNER MAINE S.H.C. BRIDGE DIV.

ORDER NO. VERBAL DWG. NO. 65-19-S4

APP 9-1-65

98-34

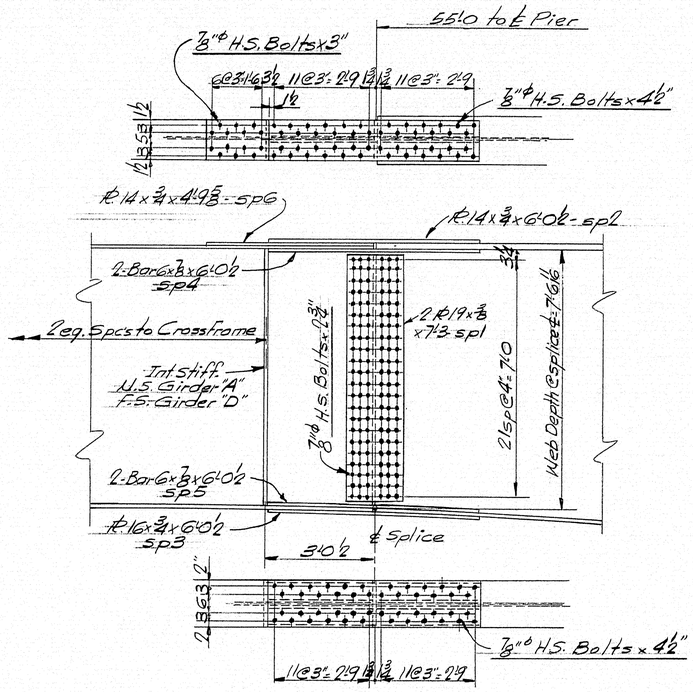

SPLICE DETAIL
Girders "A" & "D"
(Exterior)

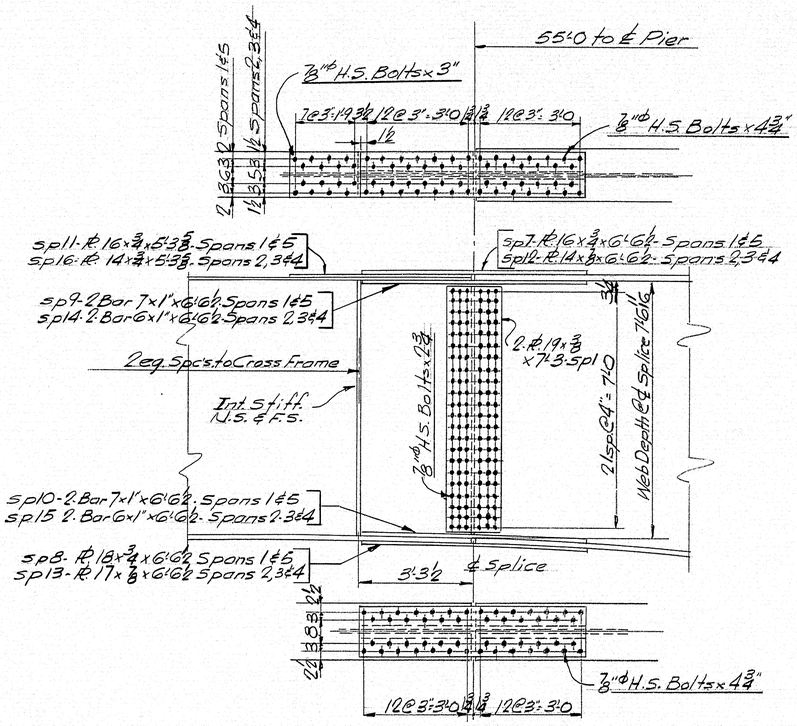

SPLICE DETAIL
Girders "B" & "C"
(Interior)

Max. Gap = ¼"

NOTE

Splice connections to be made with 7/8"ϕ High Tensile Strength Bolts, - Holes to be 15/16"ϕ
For General Notes see Dwg. E1

DRAWN	3-18-65	J.P.F.
REVISION		
REVISION		
REVISION		

PROJ. No I-95-9(29)

N. B. & S. B. BRIDGES

SPLICE DETAILS

Bancroft & Martin Inc.
South Portland 7, Maine

I-95 over PENOBSCOT RIVER
MEDWAY, MAINE

CUSTOMER CALLAHAN BROS. INC.
DESIGNER MAINE S.H.C. BRIDGE DIV.

ORDER NO. VERBAL | DWG. NO. 65-19-S5

APR 9-1-65

98-35

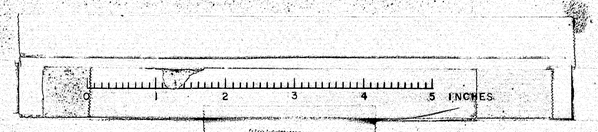

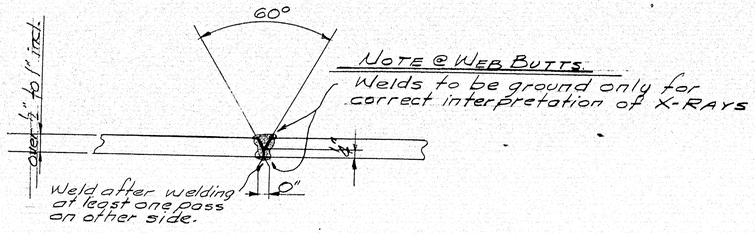

WA (B-L2b-5)

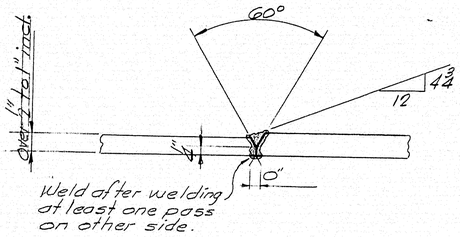

WB (B-L2b-5)

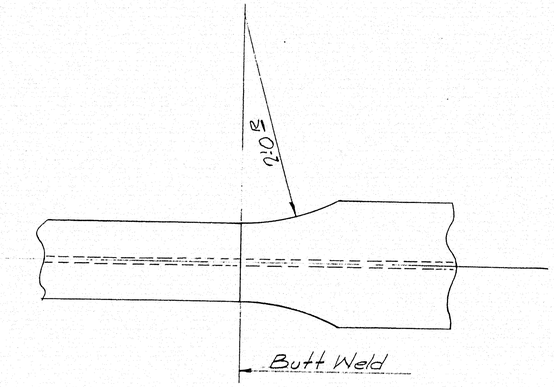

TRANSITION OF WIDTH
(Typical)

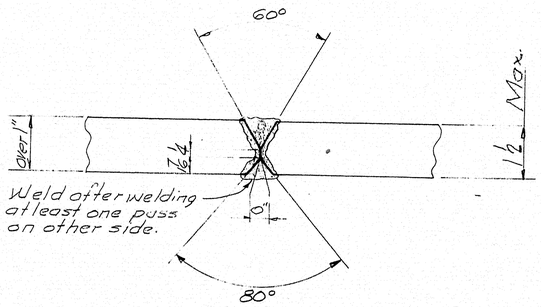

WC (B-L3-5)

WELDING NOTES

1.) Welds for flange plate & web plate butts: Submerged Arc.
A441 Steel. Linde Air Prod. Co. Unionmelt 5/32 #36 wire Grade 50 Flux.
A36 Steel do do 5/32 #29 do 50 Flux.
Web to flange fillets: Submerged Arc.
A441 & A36 Steel - Linde Air Prod. Co Unionmelt 5/32 #29 wire Grade 50 Flux.
Bearing Stiffeners: Submerged Arc.
A441 & A36 Steel. Lincoln Electric Co. 5/32 L 60 wire - 780 Flux.

Automatic or semi-automatic arc welding shall be certified by a letter of compliance that the electrode and flux are capable of producing weld metal having properties for the applicable base metal.

2.) The following non-destructive tests of the welded steel girders will be required
A - Radiographic testing of shop butt welds
B - Magnetic particle testing of shop welds, girder webs to flanges & bearing stiffeners to girder webs.
For additional information see supplemental specs. & Special Provisions.

3.) Flanges & webs are to be butt welded & inspected in accordance with the above specifications prior to being fillet welded to each other.

4.) All butt welds in flange PLs are to be ground flush. See Note for web butts.

APP. 9-1-65

Proj. No. I-95-9(29)

N. B. & S. B. BRIDGES

WELDING DETAILS

Bancroft & Martin Inc.
South Portland 7, Maine

I-95 OVER PENOBSCOT RIVER
MEDIWAY, MAINE

DRAWN	3-18-65	J.P.P.
REVISION		
REVISION		
REVISION		

CUSTOMER CALLAHAN BROS. INC.
DESIGNER MAINE S.H.C. BRIDGE DIV.

ORDER NO. VERBAL DWG. NO. 65-19-56

98-36

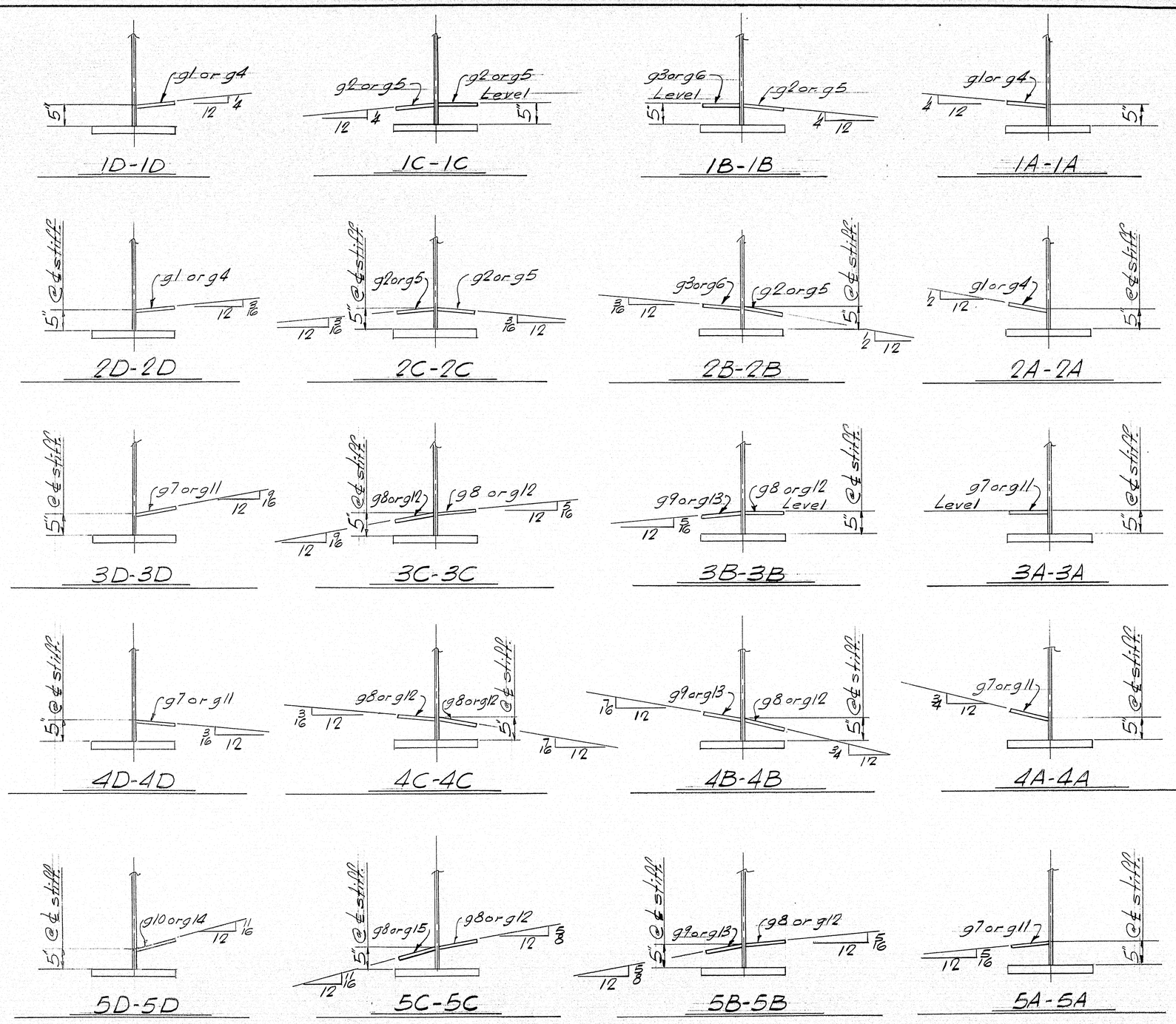

Stiffeners not shown.
For Gusset Details see Dwg. 511
Do Not Paint Gussets.

DRAWN	4-17-68	J.P.F.
REVISION		
REVISION		
REVISION		

APPR. 1-65

PROJ. NO. I-95-9(29)

N.B. & S.B. BRIDGES

SECTIONS @ LAT. BR. GUSSETS

Bancroft & Martin Inc.
South Portland 7, Maine

I-95 OVER PENOBSCOT RIVER
MEDWAY, MAINE

CUSTOMER CALLAHAN BROS. INC.

DESIGNER MAINE S.H.C. BRIDGE DIV.

ORDER NO. VERBAL

DWG. NO. 05-19-57

98-37

0 1 2 3 4 5 INCHES

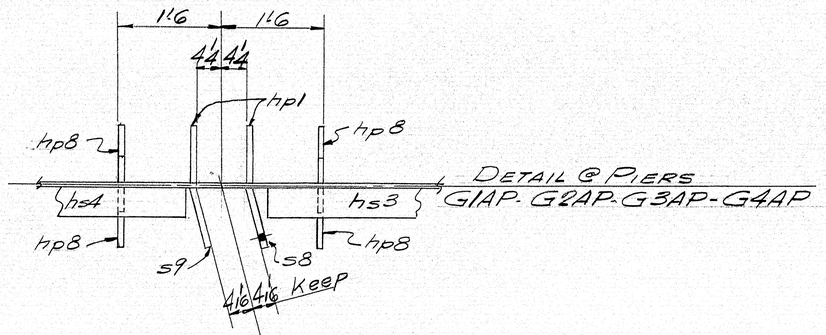

DETAIL @ PIERS
G1AP-G2AP-G3AP-G4AP

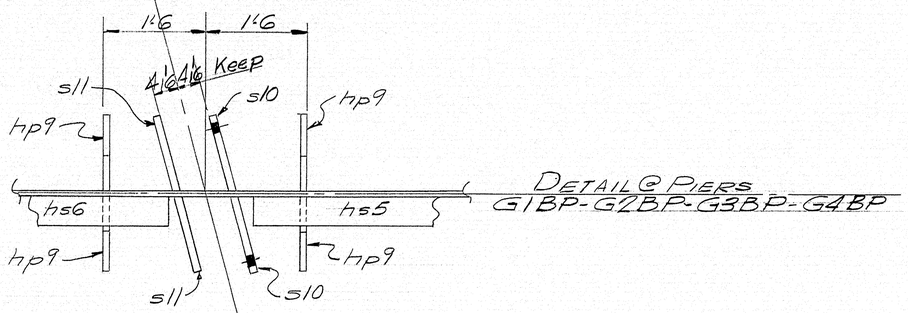

DETAIL @ PIERS
G1BP-G2BP-G3BP-G4BP

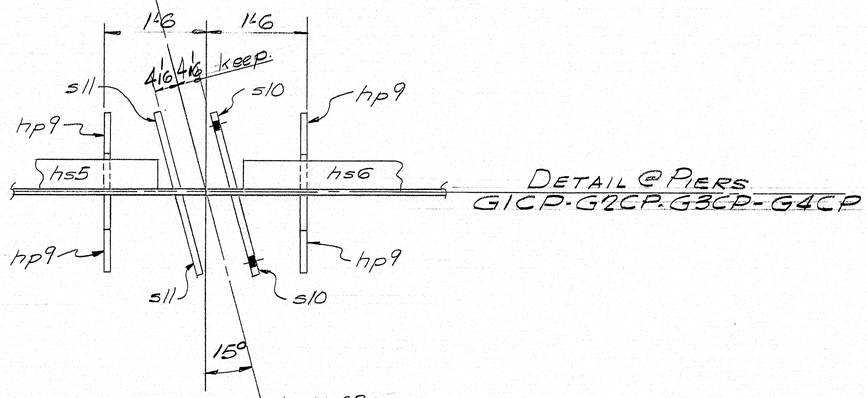

DETAIL @ PIERS
G1CP-G2CP-G3CP-G4CP

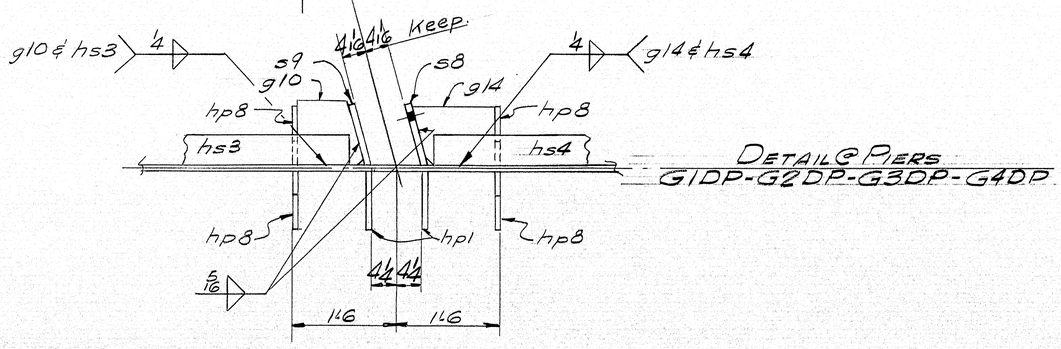

DETAIL @ PIERS
G1DP-G2DP-G3DP-G4DP

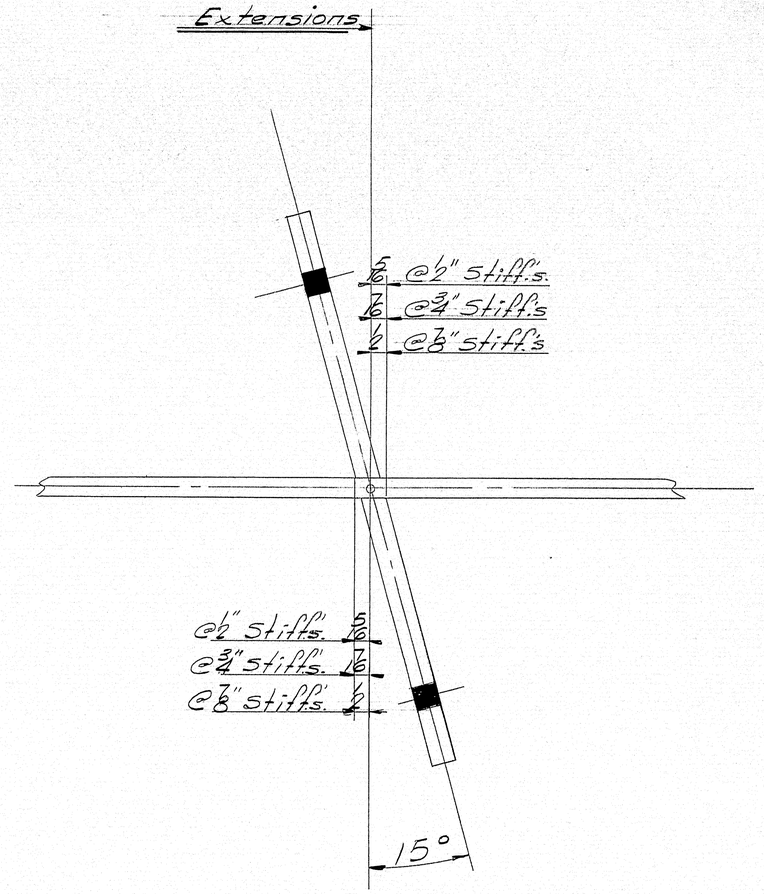

DETAIL @ SKEWED STIFFENERS

PROJ. No. I-95-9(29)

N.B. & S.B. BRIDGES

SPECIAL DETAILS

Bancroft & Martin Inc.
South Portland 7, Maine

I-95 OVER PENOBSCOT RIVER
MEDWAY, MAINE

APR 9-1-65

DRAWN	5-3-65	J.P.F.
REVISION		
REVISION		
REVISION		

CUSTOMER CALLAHAN BROS. INC.
DESIGNER MAINE S.H.C. BRIDGE DIV.
ORDER NO. VERBAL DWG. NO. 65-19-58

98-38

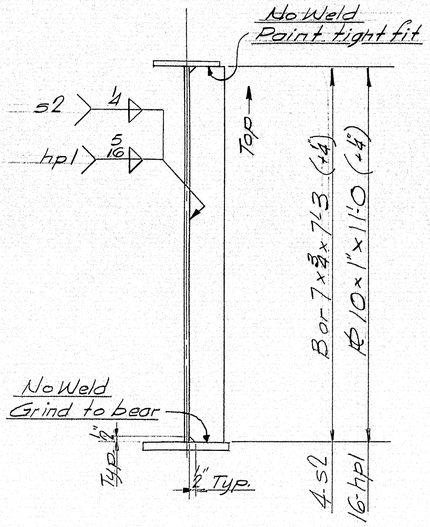

Typ. Detail @ s2 & hpl

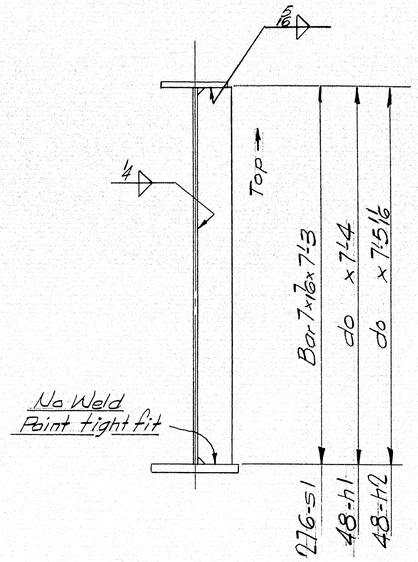

Typ. Detail @ s1-h1 & h2

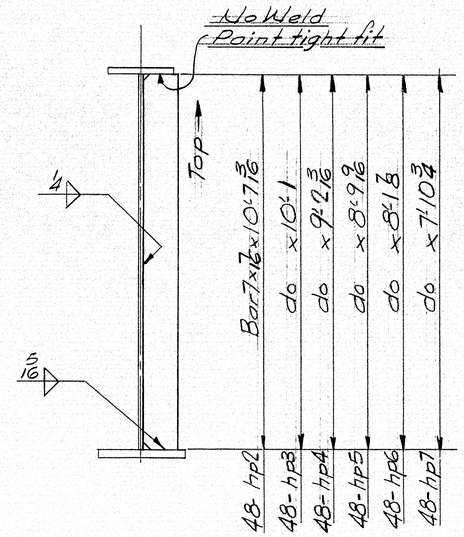

Typ Detail @ hp2 to hp7

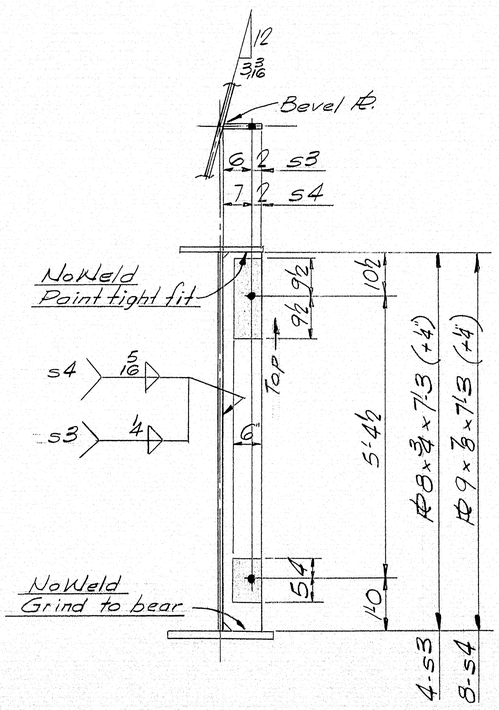

Typ. Detail @ s3 & s4

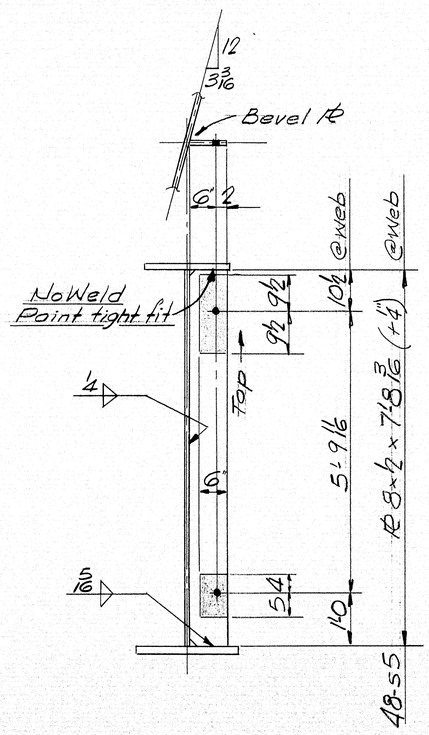

Typ. Detail @ s5

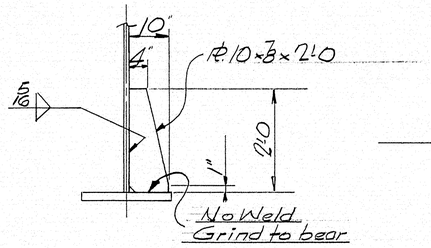

Typ Detail @ hp8
32 Req'd.

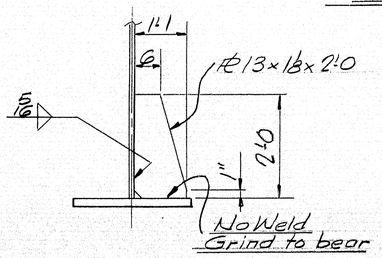

Typ Detail @ hp9
32 Req'd.

NOTES

All holes 15/16 φ

There shall be No Paint N.S. & F.S. of stiffeners @ shaded areas. See Note on Dwg. 56 for welding of bearing stiffeners s2, s3 - s4, hpl - hp8 & hp9

Quantities shown are for One Bridge

DRAWN	4-2-65	J.P.F.	
REVISION			
REVISION			
REVISION			

PROJ. No. I-95-9(29)

N.B. & S.B. BRIDGES

STIFFENER DETAILS

Bancroft & Martin Inc.
South Portland 7, Maine

I-95 over PENOBSCOT RIVER
MEDWAY, MAINE

CUSTOMER CALLAHAN BROS. INC.
DESIGNER MAINE S.H.C. BRIDGE DIV.

ORDER NO. VERBAL DWG. NO 65-19-59

APP 9-1-65

98-39

0 1 2 3 4 5 INCHES

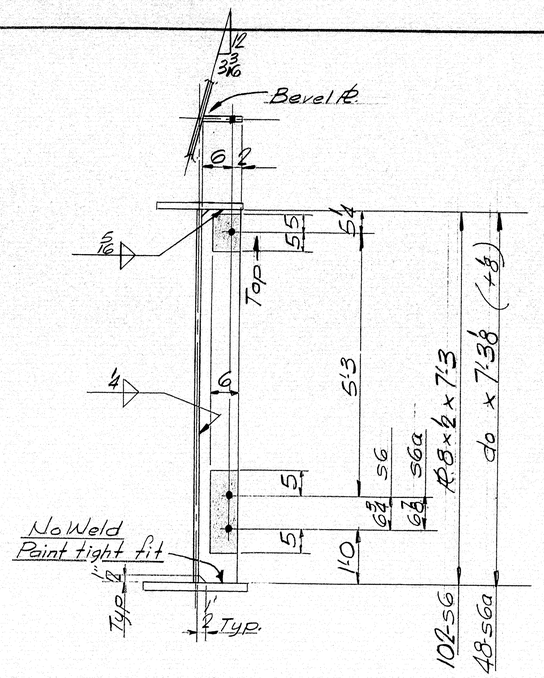

Typ. Detail @ s6 & s6a

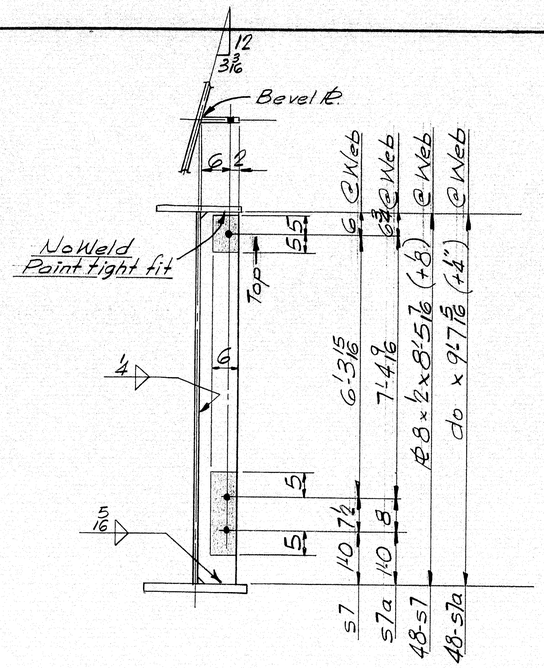

Typ. Detail @ s7 & s7a

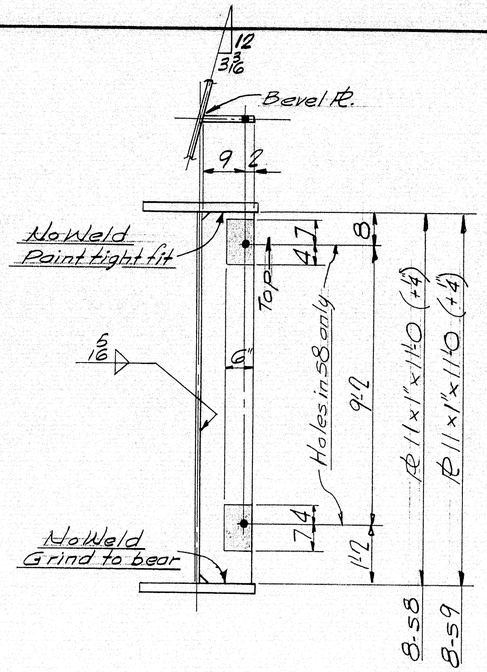

Typ. Detail @ s8 & s9

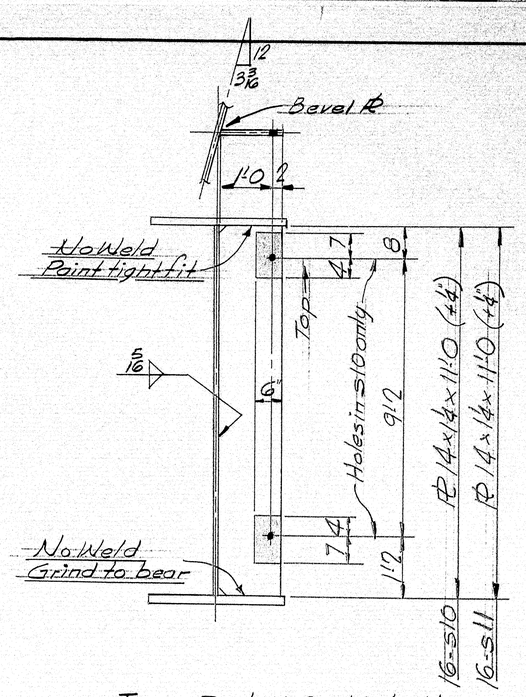

Typ. Detail @ s10 & s11

NOTES

All holes 15/16"ϕ

There shall be No Point N.S. & F.S. of stiffeners @ shaded areas. See Note on Dwg. S6 for welding of bearing stiffeners s8-s9-s10 & s11

Quantities shown are for One Bridge

PROJ. No I-95-9 (29)	
N.B. & S.B. BRIDGES	
STIFFENER DETAILS	
Bancroft & Martin Inc. South Portland 7, Maine	
I-95 OVER PENOBSCOT RIVER MEDWAY, MAINE	
CUSTOMER CALLAHAN BROS. INC.	
DESIGNER MAINE S.H.C. BRIDGE DN.	
ORDER NO. VERBAL	DWG. NO. 65-19-S10

APP. 9-1-65

DRAWN	4-2-65	J.P.F.
REVISION		
REVISION		
REVISION		

98-40

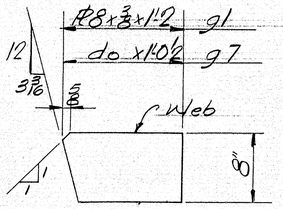

g1 - 30 Req'd.
g7 - 20 Req'd.

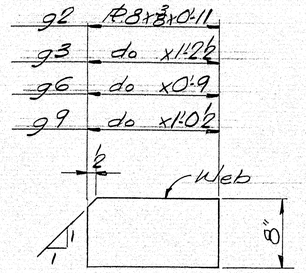

g2 - 45 Req'd.
g3 - 15 Req'd.
g6 - 15 Req'd.
g9 - 12 Req'd.

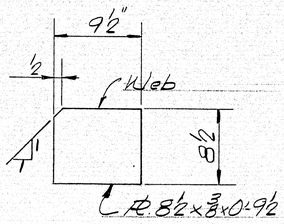

g8 - 36 Req'd.

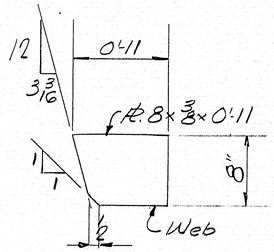

g4 - 30 Req'd.

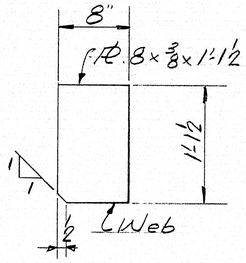

g5 - 45 Req'd.

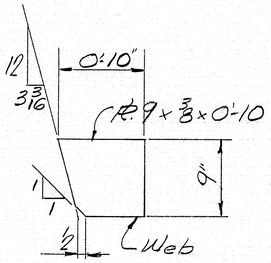

g11 - 20 Req'd

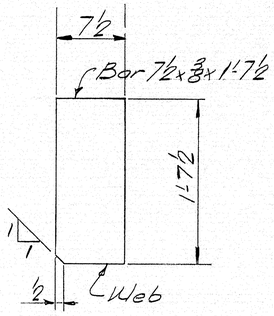

g12 - 32 Req'd.

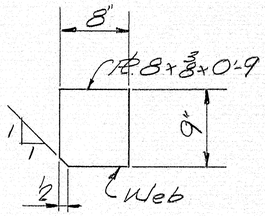

g13 - 12 Req'd

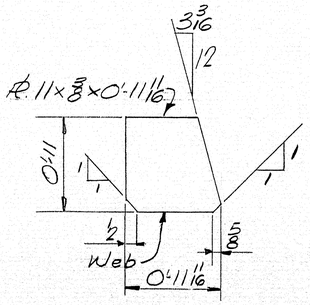

g10 - 4 Req'd.

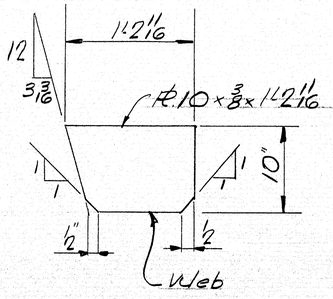

g14 - 4 Req'd.

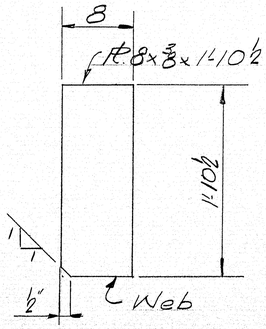

g15 - 4 Req'd.

Quantities shown are for One Bridge

DRAWN	4-30-65	J.P.F.
REVISION		
REVISION		
REVISION		

PROJ. No. I-95-9 (29)
N.B. & S.B. BRIDGES
LAT. BR. GUSSET DETAILS
Bancroft & Martin Inc.
South Portland 7, Maine
I-95 OVER PENOBSCOT RIVER
MEDWAY, MAINE
CUSTOMER CALLAHAN BROS. INC.
DESIGNER MAINE S.H.C. BRIDGE DIV.
ORDER NO. VERBAL
DWG. NO. 65-19-S11

APR. 9-1-65

98·41

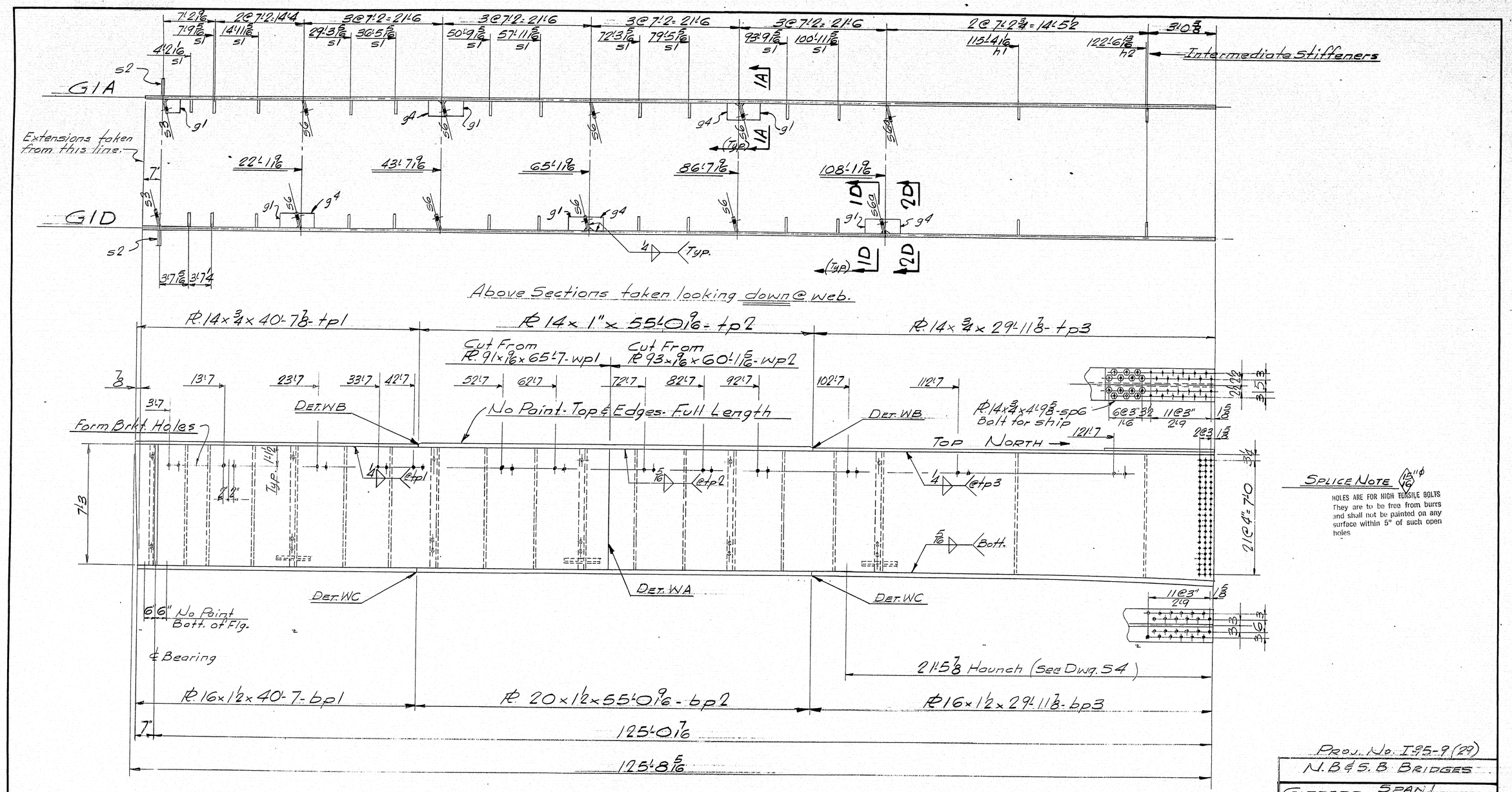

SPLICE NOTE

HOLES ARE FOR HIGH TENSILE BOLTS
They are to be free from burrs and shall not be painted on any surface within 5" of such open holes

2 GIRDERS G1A & G1D
MAKE ONE OF EACH

For Welding Details see Dwg. 56
For Camber Diagram see Dwg. 53
For Stiffener Details see Dwg. 59 & 510
For Sections not shown see Dwg. 57
For Web Cutting Detail see Dwg. 54
For Stud Layout see Dwg. 522
For Detail @ Skewed Stiffs. see Dwg. 58

Quantities shown are for One Bridge
Add suffix N to marks for Northbound Bridge (Bill of Mat. 512N)
do S do do Southbound Bridge (do do 512S)

DRAWN	3-25-65	J.P.F.
REVISION	9-7-65	J.P.F.
REVISION		
REVISION		

APP. 9-1-65

PROJ. No. I-95-9(29)
N.B. & S.B. BRIDGES
GIRDERS SPAN 1 (EXTERIOR)
Bancroft & Martin Inc.
South Portland 7, Maine
I-95 OVER PENOBSCOT RIVER
MEDWAY, MAINE
CUSTOMER CALLAHAN BROS. INC.
DESIGNER MAINE S.H.C. BRIDGE DIV.
ORDER NO. VERBAL
DWG. NO. 65-19-512

98-42

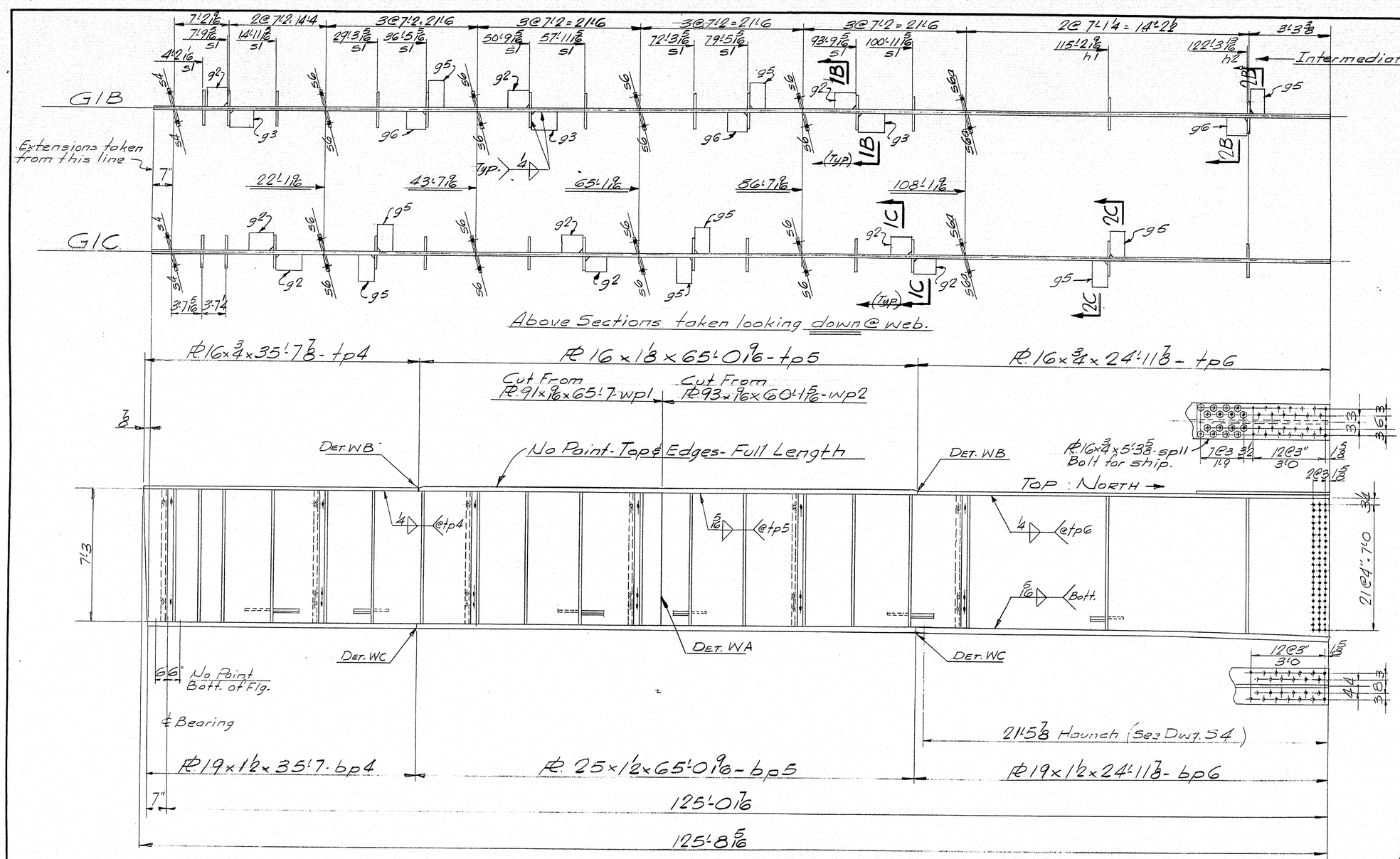

2 Girders G1B & G1C
Make One of Each

Quantities shown are for One Bridge
Add suffix N to marks for Northbound Bridge (Bill of Mat. 513N)
do S do do Southbound Bridge (do do 513S)

For Welding Details see Dwg. 56
For Camber Diagram see Dwg. 53
For Stiffener Details see Dwg. 59 & 510
For Sections not shown see Dwg. 57
For Web Cutting Detail see Dwg. 54
For Stud Layout see Dwg. 522
For Detail @ Skewed Stiff's see Dwg. 58

Splice Note

Holes are for high tensile bolts. They are to be free from burrs and shall not be painted on any surface within 5" of such open holes.

Proj. No. I-95-9(29)
N.B. & S.B. Bridges
Girders Span 1 (Interior)
Bancroft & Martin Inc.
South Portland 7, Maine
I-95 over Penobscot River
Medway, Maine
Customer Callahan Bros. Inc.
Designer Maine S.H.C. Bridge Div.
Order No. Verbal
Dwg. No. 65-19-513

DRAWN	3-25-65	J.P.F.
REVISION		
REVISION		
REVISION		

App 9-1-65

98-43

0 1 2 3 4 5 INCHES

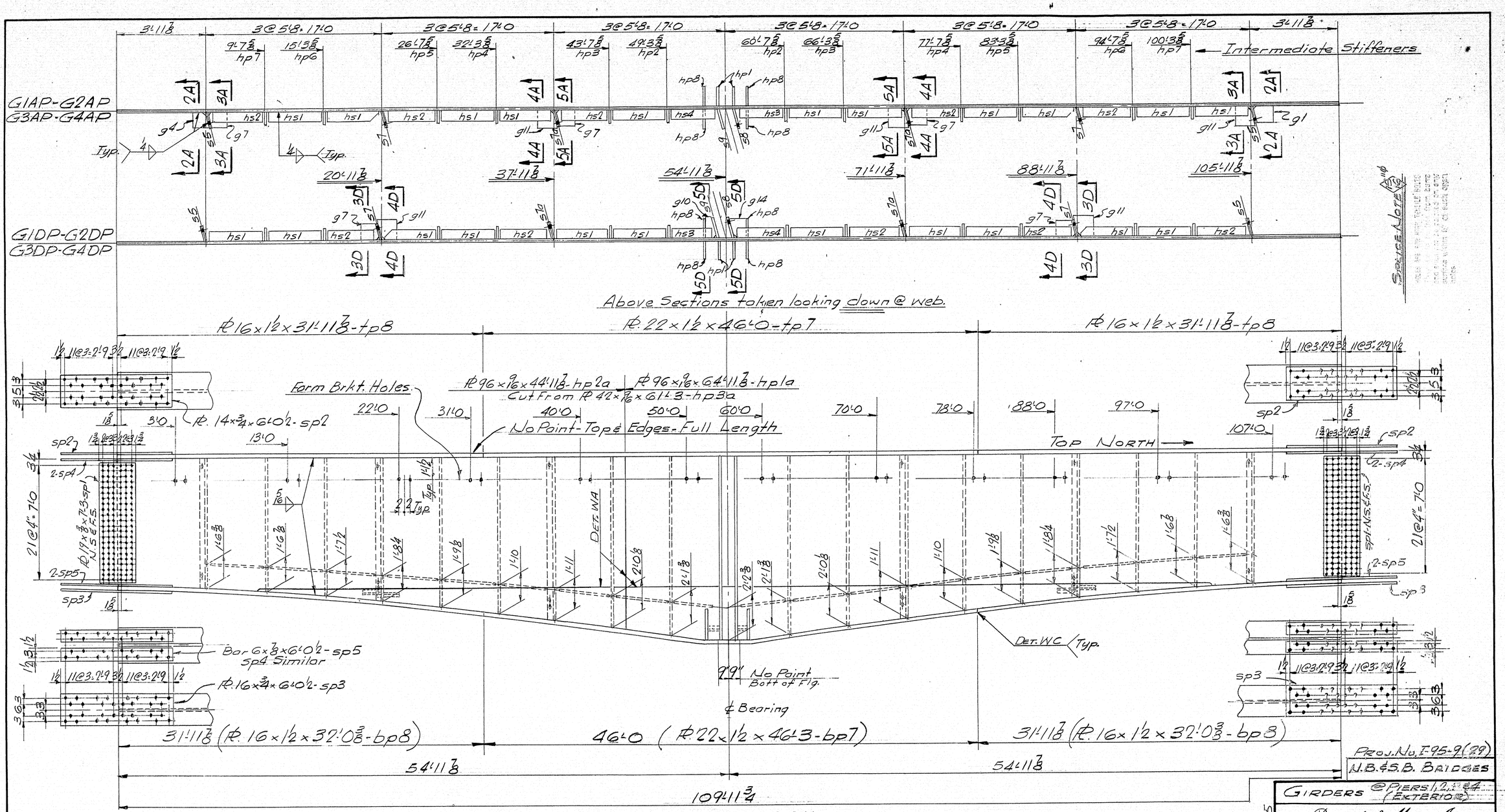

8 GIRDERS

G1AP - G2AP - G3AP - G4AP

G1DP - G2DP - G3DP - G4DP

MAKE ONE OF EACH

Quantities shown are for One Bridge.
Add suffix N to marks for Northbound Bridge (Bill of Mat. S14N)
do S do do Southbound Bridge (do do S14S)

For Welding Details see Dwg. S6
For Camber Diagram see Dwg. S3
For Stiffener Details see Dwg. S9 & S10
For Sections not shown see Dwg. S7
For Web Cutting Detail see Dwg. S4
For Stud Layout see Dwg. S22 & S22A
For Special Details @ Piers & skewed stiffeners see Dwg. S8

DRAWN	8-26-65	J.P.F.
REVISION	9-7-65	J.P.F.
REVISION	3-21-66	J.P.F.
REVISION		

APP. 9-1-65

PROJ. No. I-95-9(29)
N.B. & S.B. BRIDGES

GIRDERS @ PIERS 1, 2, 3 & 4 (EXTERIOR)

Bancroft & Martin Inc.
South Portland 7, Maine

I-95 OVER PENOBSCOT RIVER
MEDWAY, MAINE

CUSTOMER CALLAHAN BROS. INC
DESIGNER MAINE S.H.C. BRIDGE DIV.

ORDER NO. VERBAL | DWG. NO. 65-19-S14

98-44

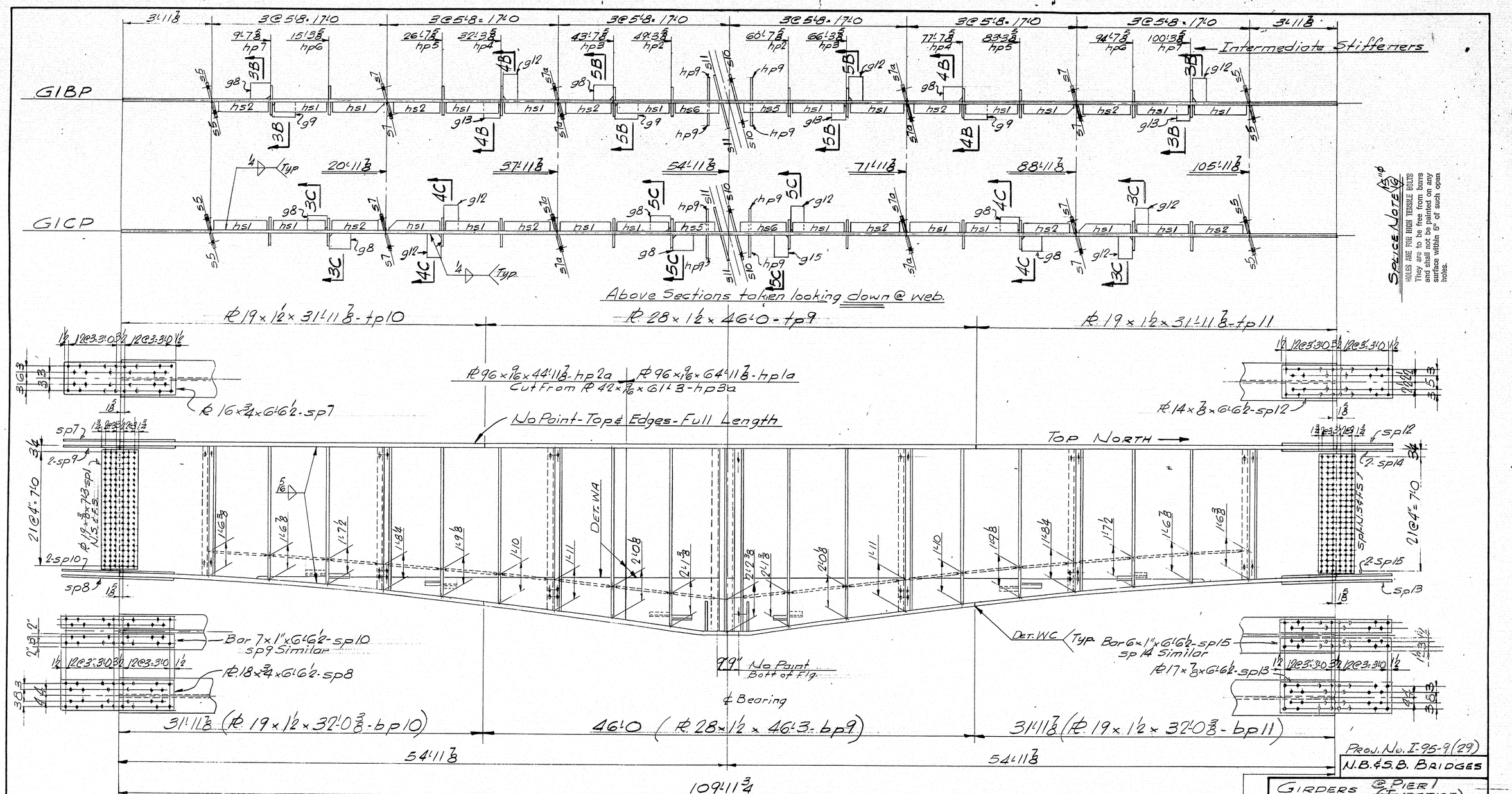
Intermediate Stiffeners
G1BP
G1CP
Above Sections taken looking down @ web.
PL 19 × 1½ × 31'-11⅞ - fp10
PL 28 × 1½ × 46'-0 - fp9
PL 19 × 1½ × 31'-11⅞ - fp11
PL 96 × 9/16 × 44'-11⅞ - hp2a
PL 96 × 9/16 × 64'-11⅞ - hp1a
Cut from PL 42 × 9/16 × 61'-3 - hp3a
PL 16 × ¾ × 6'-6½ - sp7
No Point - Top & Edges - Full Length
TOP NORTH
PL 14 × ⅞ × 6'-6½ - sp12
21@4" = 7'-0
DET. WA
DET. WC
Bar 7 × 1" × 6'-6½ - sp10
sp9 Similar
PL 18 × ¾ × 6'-6½ - sp8
Bar 6 × 1" × 6'-6½ - sp15
sp14 Similar
PL 17 × ⅞ × 6'-6½ - sp13
9.9" No Point Bott of Flg.
℄ Bearing
31'-11⅞ (PL 19 × 1½ × 32'-0⅜ - bp10)
46'-0 (PL 28 × 1½ × 46'-3 - bp9)
31'-11⅞ (PL 19 × 1½ × 32'-0⅜ - bp11)
54'-11⅞
54'-11⅞
109'-11¾
Web & Flg's A.S.T.M. Desig. A441
2 GIRDERS - G1BP - G1CP
MAKE ONE OF EACH
Quantities shown are for One Bridge.
Add suffix N to marks for Northbound Bridge (Bill of Mat. 515N)
do S do do Southbound Bridge (do do 515S)
For Welding Details see Dwg. 56
For Camber Diagram see Dwg. 53
For Stiffener Details see Dwg. S9 & S10
For Sections not shown see Dwg. S7
For Web Cutting Detail see Dwg. S4
For Stud Layout see Dwg. S22
For Special Details @ Piers & skewed stiffeners see Dwg. S8
SPLICE NOTE
HOLES ARE FOR HIGH TENSILE BOLTS
They are to be free from burrs and shall not be painted on any surface within 5" of such open holes.
PROJ. NO. I-95-9(29)
N.B. & S.B. BRIDGES
GIRDERS @ PIER 1 (INTERIOR)
Bancroft & Martin Inc.
South Portland 7, Maine
I-95 OVER PENOBSCOT RIVER
MEDWAY, MAINE
CUSTOMER CALLAHAN BROS. INC
DESIGNER MAINE S.H.C. BRIDGE DIV.
ORDER NO. VERBAL
DWG. NO. 65-19-515
DRAWN 3-26-65 J.P.F.
REVISION 3-21-66 J.P.F.
REVISION
REVISION
APR. 9-1-65
98-45

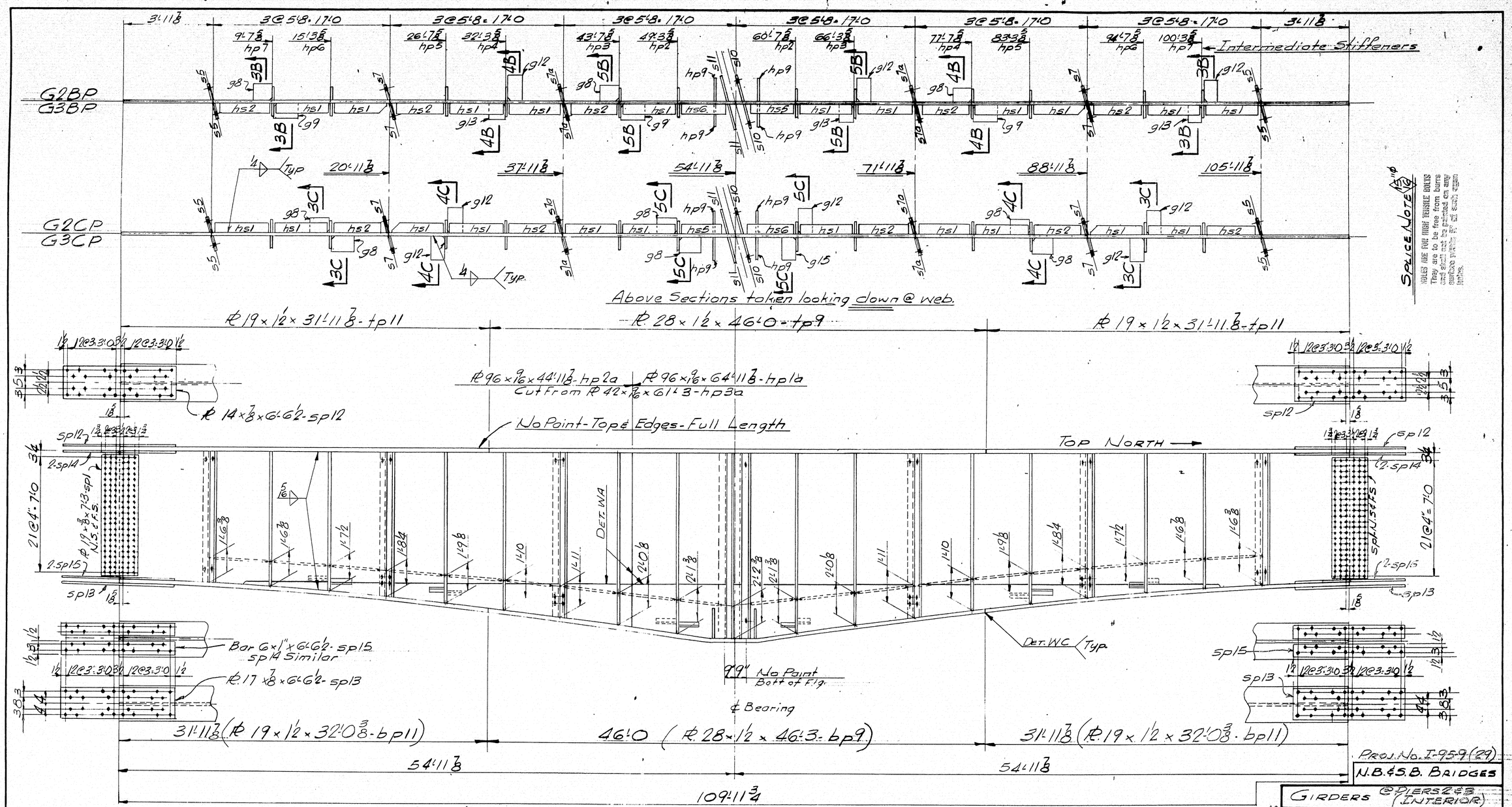

4 GIRDERS

G2BP - G2CP - G3BP - G3CP

MAKE ONE OF EACH

Web & Flg's A.S.T.M. Desig. A441

Quantities shown are for One Bridge.
Add suffix N to marks for Northbound Bridge (Bill of Mat. 516N)
do S do do Southbound Bridge (do do 516S)

For Welding Details see Dwg. S6
For Camber Diagram see Dwg. S3
For Stiffener Details see Dwg. S9 & S10
For Sections not shown see Dwg. S7
For Web Cutting Detail see Dwg. S4
For Stud Layout see Dwg. S22 & S22A
For Special Details @ Piers & skewed stiffeners see Dwg. S8

DRAWN	3-26-65	J.P.F.
REVISION	3-21-66	J.P.F.
REVISION		
REVISION		

APP 9-1-65

PROJ. No. I-95-9(29)
N.B. & S.B. BRIDGES

GIRDERS @ PIERS 2 & 3 (INTERIOR)

Bancroft & Martin Inc.
South Portland 7, Maine

I-95 OVER PENOBSCOT RIVER
MEDWAY, MAINE

CUSTOMER CALLAHAN BROS. INC
DESIGNER MAINE S.H.C. BRIDGE DIV.

ORDER NO. VERBAL DWG. NO. 65-19-S16

98-46

0 1 2 3 4 5 INCHES

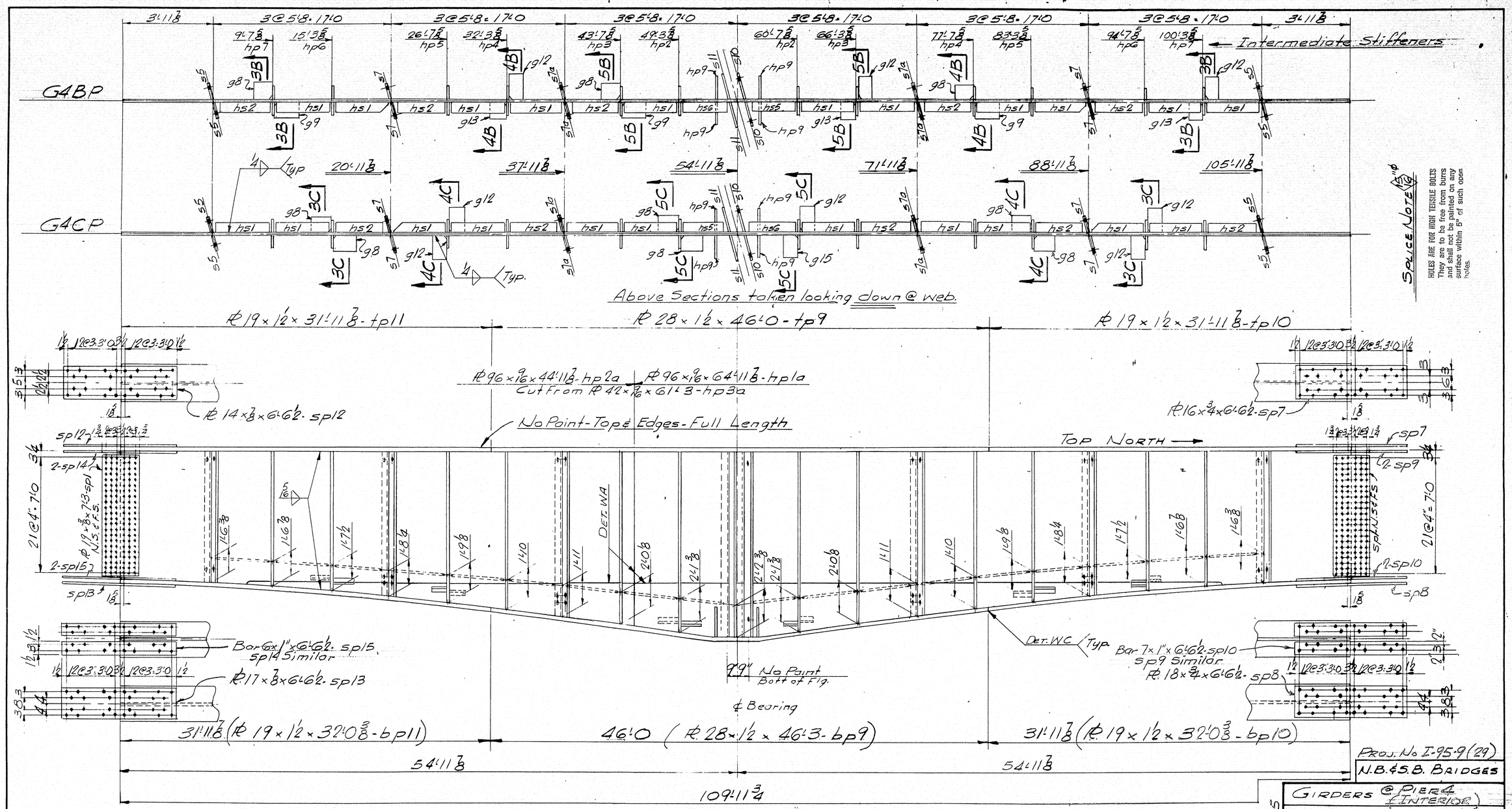

Web & Flgs. A.S.T.M. Desig. A441

2 Girders - G4BP - G4CP

Make One of Each

Quantities shown are for One Bridge.
Add suffix N to marks for Northbound Bridge (Bill of Mat. 517N)
do S do do Southbound Bridge (do do 517S)

For Welding Details see Dwg. 56
For Camber Diagram see Dwg. 53
For Stiffener Details see Dwg. 59 & 510
For Sections not shown see Dwg. 57
For Web Cutting Detail see Dwg. 54
For Stud Layout see Dwg. 522A
For Special Details @ Piers & skewed stiffeners see Dwg. 58

DRAWN	3-26-65	J.P.F.
REVISION	3-21-66	J.P.F.
REVISION		
REVISION		

APP 9-1-65

98-47

PROJ. No. I-95-9(29)
N.B. & S.B. BRIDGES

GIRDERS @ PIER 4 (INTERIOR)

Bancroft & Martin Inc.
South Portland 7, Maine

I-95 OVER PENOBSCOT RIVER
MEDWAY, MAINE

CUSTOMER CALLAHAN BROS. INC
DESIGNER MAINE S.H.C. BRIDGE DIV.

ORDER NO. VERBAL | DWG. NO. 65-19-517

0 1 2 3 4 5 INCHES

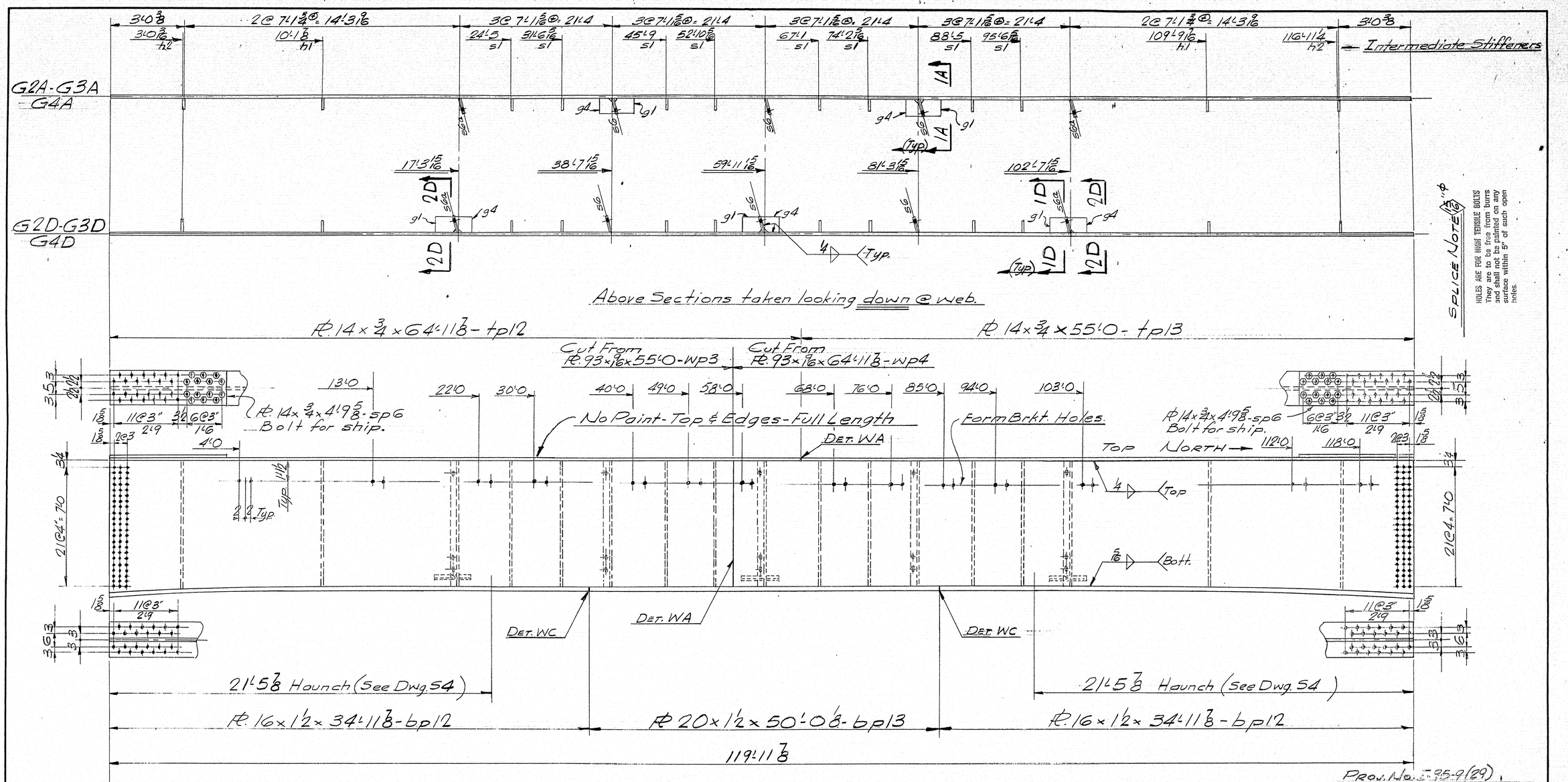

6 GIRDERS

G2A - G3A - G4A

G2D - G3D - G4D

MAKE ONE OF EACH

For Welding Details see Dwg. S6
For Camber Diagram see Dwg. S3
For Stiffener Details see Dwg. S9 & S10
For Sections not shown see Dwg. S7
For Web Cutting Detail see Dwg. S4
For Detail @ Skewed Stiff's see Dwg. S8
For Stud Layout see Dwg. S22 S22A

Quantities shown are for One Bridge
Add suffix N to marks for Northbound Bridge (Bill of Mat. S18N)
do S do do Southbound Bridge (do do S18S)

DRAWN	3-30-65	J.P.F.
REVISION	9-7-65	J.P.F.
REVISION		
REVISION		

APR. 9-1-65

PROJ. No. I-95-9(29)

N.B. & S.B. BRIDGES

GIRDERS SPANS 2, 3 & 4 (EXTERIOR)

Bancroft & Martin Inc.
South Portland 7, Maine

I-95 OVER PENOBSCOT RIVER
MEDWAY, MAINE

CUSTOMER CALLAHAN BROS. INC.
DESIGNER MAINE S.H.C. BRIDGE DIV.

ORDER NO. VERBAL DWG. NO. 65-19-S18

98-48

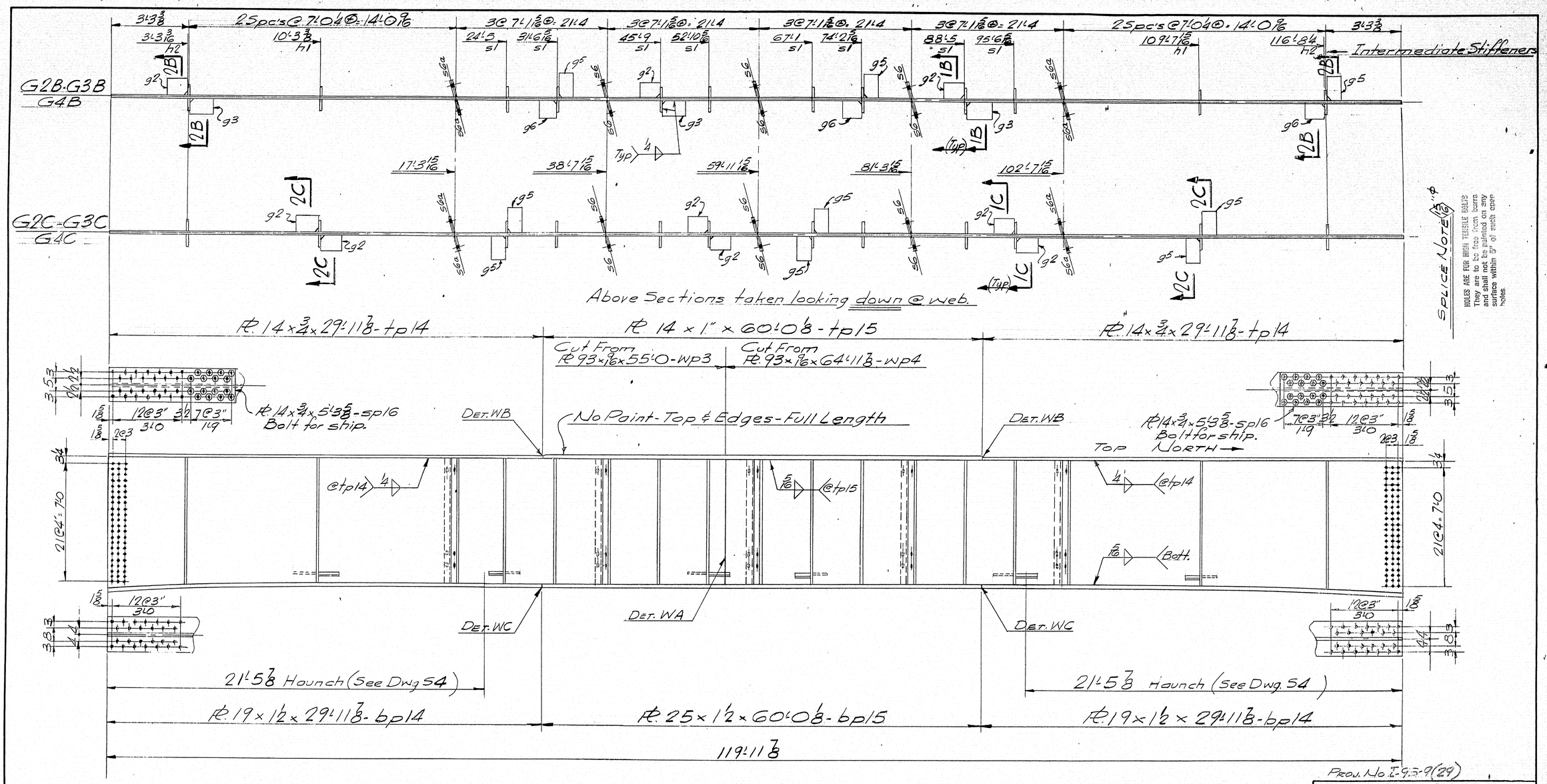

6 GIRDERS

G2B - G3B - G4B

G2C - G3C - G4C

MAKE ONE OF EACH

For Welding Details see Dwg. S6
For Camber Diagram see Dwg. S3
For Stiffener Details see Dwg. S9 & S10
For Sections not shown see Dwg. S7
For Web Cutting Detail see Dwg. S4
For Detail @ Skewed Stiff's see Dwg S8
For Stud Layout see Dwg. S22
S22A

Quantities shown are for One Bridge
Add suffix N to marks for Northbound Bridge (Bill of Mat. S19N)
do S do do Southbound Bridge (do do S19S)

DRAWN	3-31-65	J.P.F.
REVISION		
REVISION		
REVISION		

Proj. No. I-95-3-9(29)

N.B. & S.B. BRIDGES

GIRDERS SPANS 2-3 & 4 (INTERIOR)

Bancroft & Martin Inc.
South Portland 7, Maine

I-95 OVER PENOBSCOT RIVER
MEDWAY, MAINE.

CUSTOMER CALLAHAN BROS. INC.
DESIGNER MAINE S.H.C. BRIDGE DIV.

ORDER NO. VERBAL DWG. NO. 65-19-S19

APP. 9-1-65

98-49

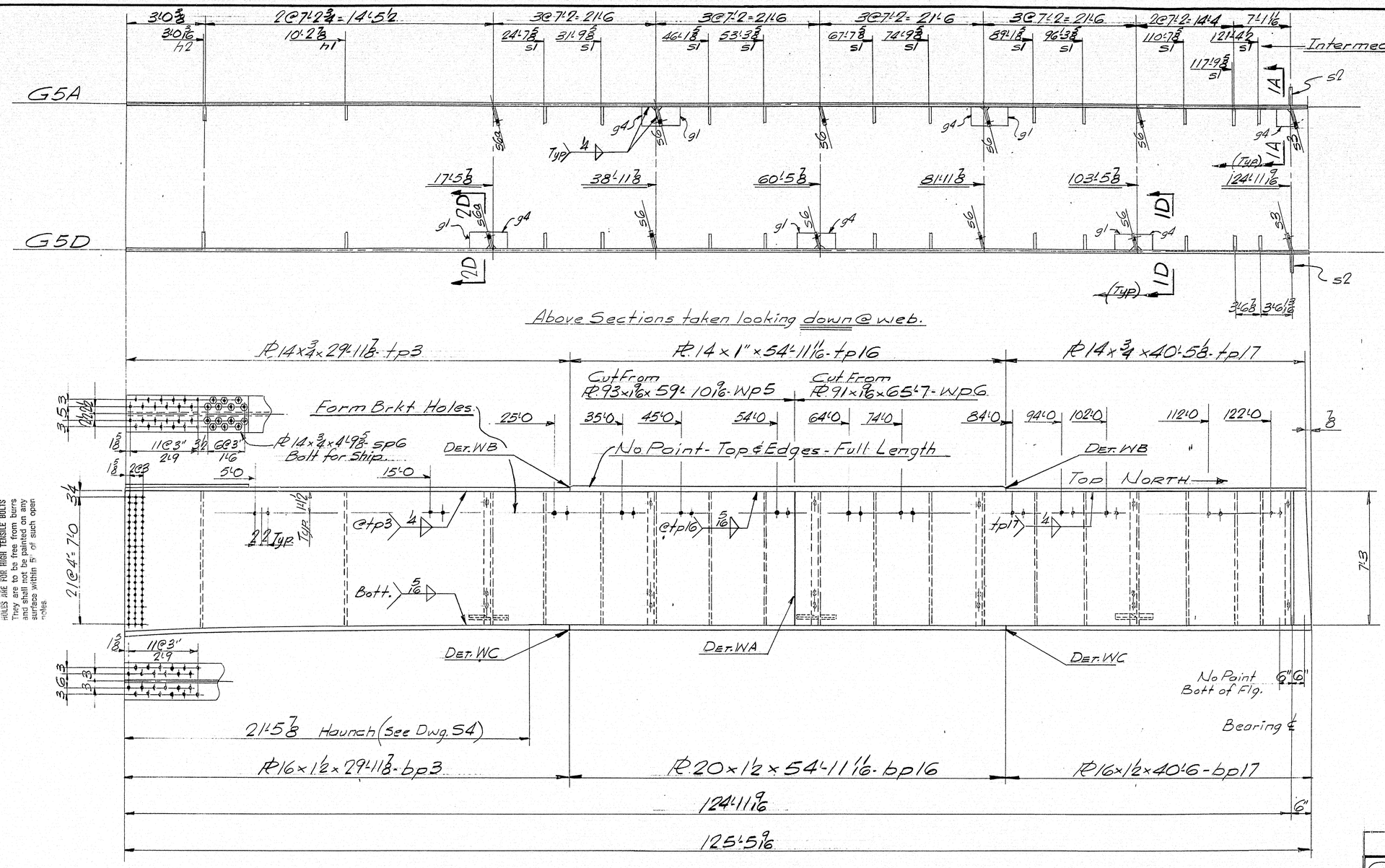

SPLICE NOTE

HOLES ARE FOR HIGH TENSILE BOLTS They are to be free from burrs and shall not be painted on any surfaces within 5" of such open holes

2 GIRDERS - G5A & G5D
MAKE ONE OF EACH

For Welding Details see Dwg. S6
For Camber Diagrams see Dwg. S3
For Stiffener Details see Dwg. S9 & S10
For Sections not shown see Dwg. S7
For Web Cutting Detail see Dwg. S4
For Detail @ Skewed Stiff's see Dwg. S8
For Stud Layout see Dwg. S22A

Quantities shown are for One Bridge
Add suffix N to marks for Northbound Bridge (Bill of Mat. S20N)
do S do do Southbound Bridge (Bill of Mat. S20S)

DRAWN	4-1-65	J.P.F.
REVISION	9-7-65	J.P.F.
REVISION		
REVISION		

APP 9-1-65

Proj. No. I-95-9(29)

NB & S.B. BRIDGES

GIRDERS SPAN 5 (EXTERIOR)

Bancroft & Martin Inc.
South Portland 7, Maine

I-95 OVER PENOBSCOT RIVER
MEDWAY, MAINE

CUSTOMER CALLAHAN BROS. INC.
DESIGNER MAINE S.H.C. BRIDGE DIV.

ORDER NO. VERBAL DWG. NO. 64-19-S20

98-50

0 1 2 3 4 5 INCHES

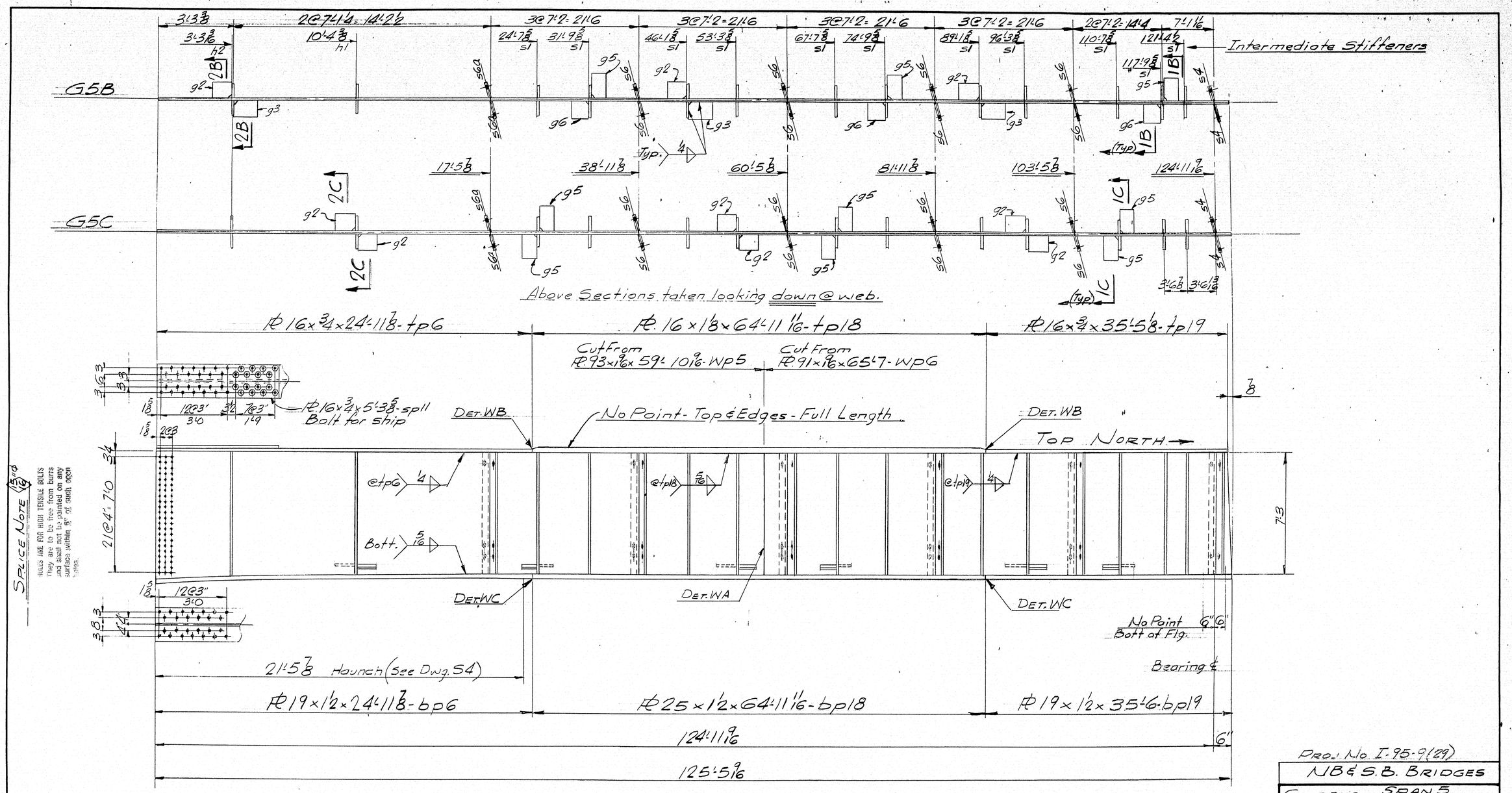

2 GIRDERS G5B & G5C
MAKE ONE OF EACH

For Welding Details see Dwg. S6
For Camber Diagrams see Dwg. S3
For Stiffener Details see Dwg. S9 & S10
For Sections not shown see Dwg. S7
For Web Cutting Detail see Dwg. S4
For Detail @ Skewed Stiff's see Dwg. S8
For Stud Layout see Dwg S22A

Quantities shown are for One Bridge
Add suffix N to marks for Northbound Bridge (Bill of Mat. S21N)
do S do do Southbound Bridge (Bill of Mat. S21S)

DRAWN	4-1-65	J.P.F.
REVISION		
REVISION		
REVISION		

APP. 9-1-65

Proj. No. I-95-9(29)

NB & S.B. BRIDGES

GIRDERS SPAN 5 (INTERIOR)

Bancroft & Martin Inc.
South Portland 7, Maine

I 95 OVER PENOBSCOT RIVER
MEDWAY, MAINE

CUSTOMER CALLAHAN BROS INC.
DESIGNER MAINE S.H.C. BRIDGE DIV.

ORDER NO. VERBAL DWG. NO. 64-19-S21

98-51

0 1 2 3 4 5 INCHES

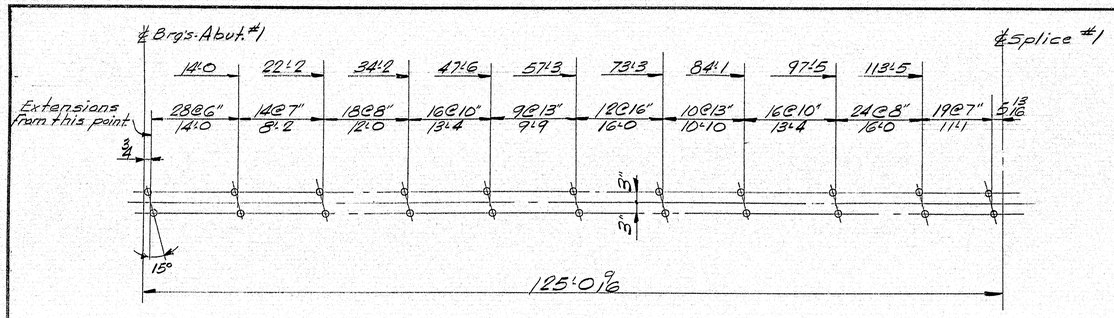

GIRDERS G1A-G1B-G1C-G1D
1336 Studs.

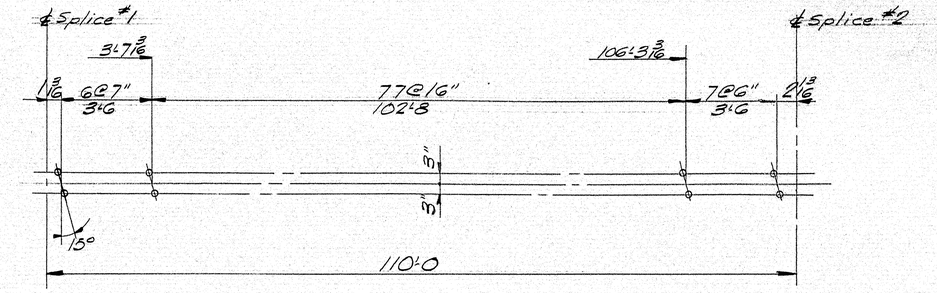

GIRDERS G1AP-G1BP-G1CP-G1DP
728 Studs.

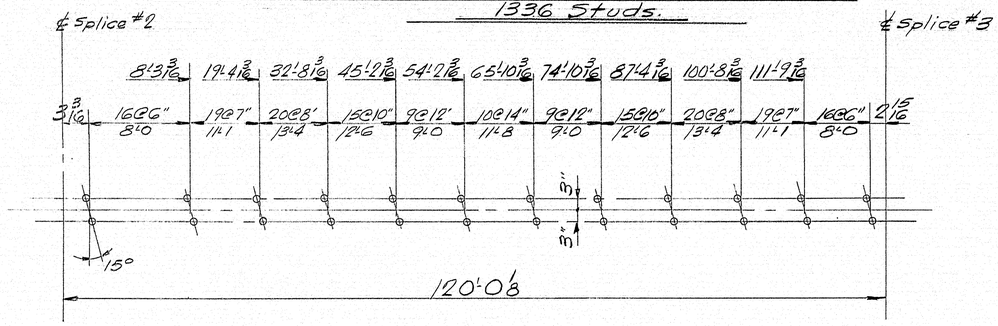

GIRDERS G2A-G2B-G2C-G2D
1352 Studs

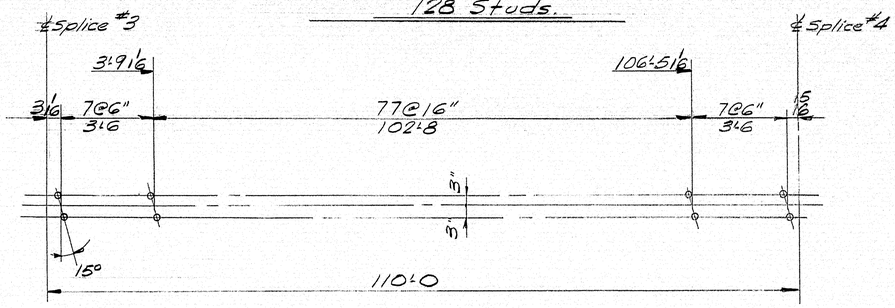

GIRDERS G2AP-G2BP-G2CP-G2DP
736 Studs

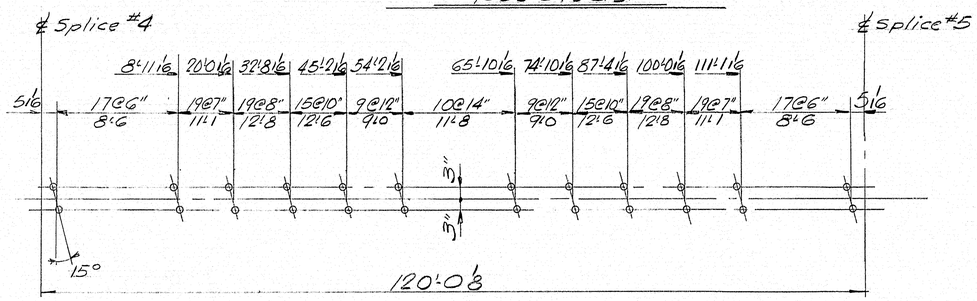

GIRDERS G3A-G3B-G3C-G3D
1352 Studs.

Quantities shown are for One Bridge

Work this Dwg. with Dwg. 522A

PROJ. No I-95-9(29)

N.B. & S.B. BRIDGES	
STUD LAYOUT	
Bancroft & Martin Inc. South Portland 7, Maine	
I-95 OVER PENOBSCOT RIVER MEDWAY, MAINE	
CUSTOMER CALLAHAN BROS. INC.	
DESIGNER MAINE S.H.C. BRIDGE DIV.	
ORDER NO. VERBAL	DWG. NO. 65-19522

APP. 9-1-65

DRAWN	5-6-65	J.P.F.
REVISION		
REVISION		
REVISION		

98-52

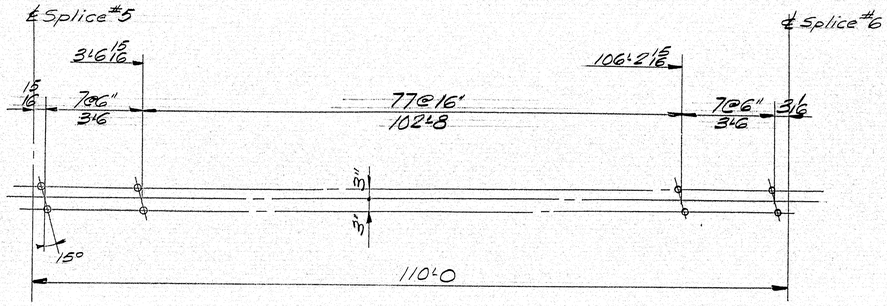

GIRDERS G3AP-G3BP-G3CP-G3DP

736 Studs

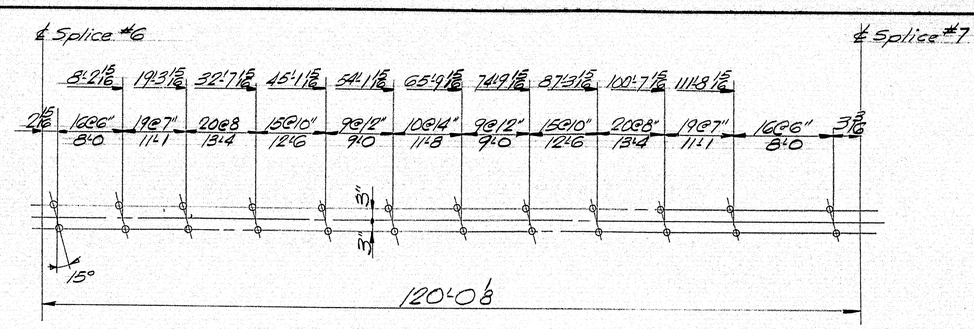

GIRDERS G4A-G4B-G4C-G4D

1352 Studs

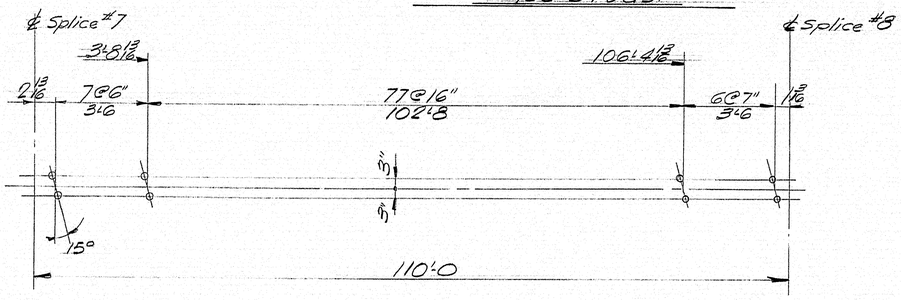

GIRDERS G4AP-G4BP-G4CP-G4DP

728 Studs

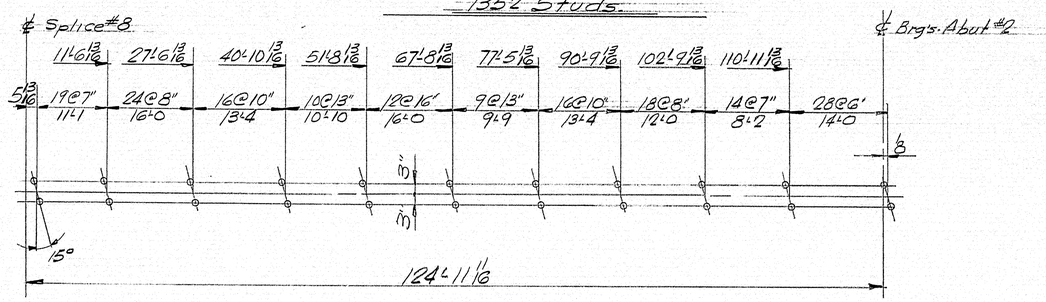

GIRDERS G5A-G5B-G5C-G5D

1336 Studs

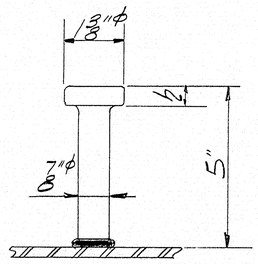

STUD DETAIL

NOTE

Shop adjustment may be made in stud spacing @ Flg. Butt Welds & at Bolts in field splices (Weld Studs to splice plates)
Work this Dwg. with Dwg. S22

TOTAL 9,656 Studs - ITEM 705-17

Quantities shown are for One Bridge

PROJ. No. I-95-9(29)

N.B. & S.B. BRIDGES.

STUD LAYOUT

Bancroft & Martin Inc.
South Portland 7, Maine

I-95 OVER PENOBSCOT RIVER
MEDWAY, MAINE

CUSTOMER CALLAHAN BROS. INC.
DESIGNER MAINE S.H.C. BRIDGE DIV.
ORDER NO. VERBAL
DWG. NO. 65-19-S22A

DRAWN	5-6-65	J.P.F.
REVISION		
REVISION		
REVISION		

APP. 9-1-65

98-53

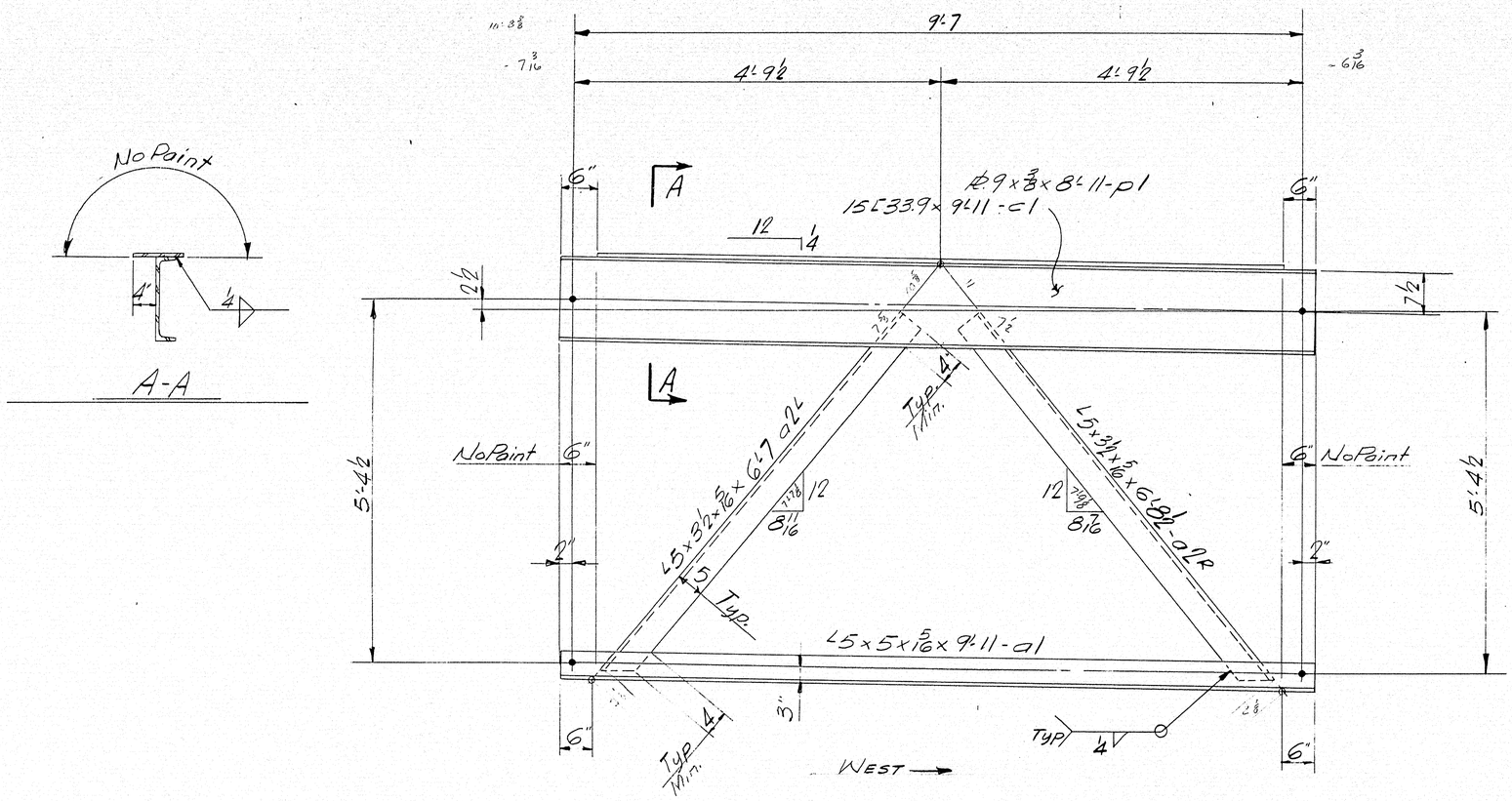

FRAME A1A - 2 REQ'D.

Quantities shown are for One Bridge
Add suffix N to marks for Northbound Bridge (Bill of Mat. 523N)
do S do do Southbound Bridge (Bill of Mat. 523S)

PROJ. No. I-95-9(29)
SHOP CONNECTIONS: Welded
FIELD CONNECTIONS: Temp. Bolts - Welded
HOLES: 13/16" ϕ
PAINT: Per Maine Specs.

~~N.B. & S.B. BRIDGES~~

CROSS FRAME - A1A

Bancroft & Martin Inc.
South Portland 7, Maine

~~I-95 OVER PENOBSCOT RIVER~~
~~MEDWAY, MAINE~~

APP. 9-1-65

DRAWN	4-14-65	J.P.F.
REVISION		
REVISION		
REVISION		

CUSTOMER ~~CALLAHAN BROS. INC.~~
DESIGNER ~~MAINE S.H.C. BRIDGE DIV.~~
ORDER NO. VERBAL
DWG. NO. 65-19-523

98-54

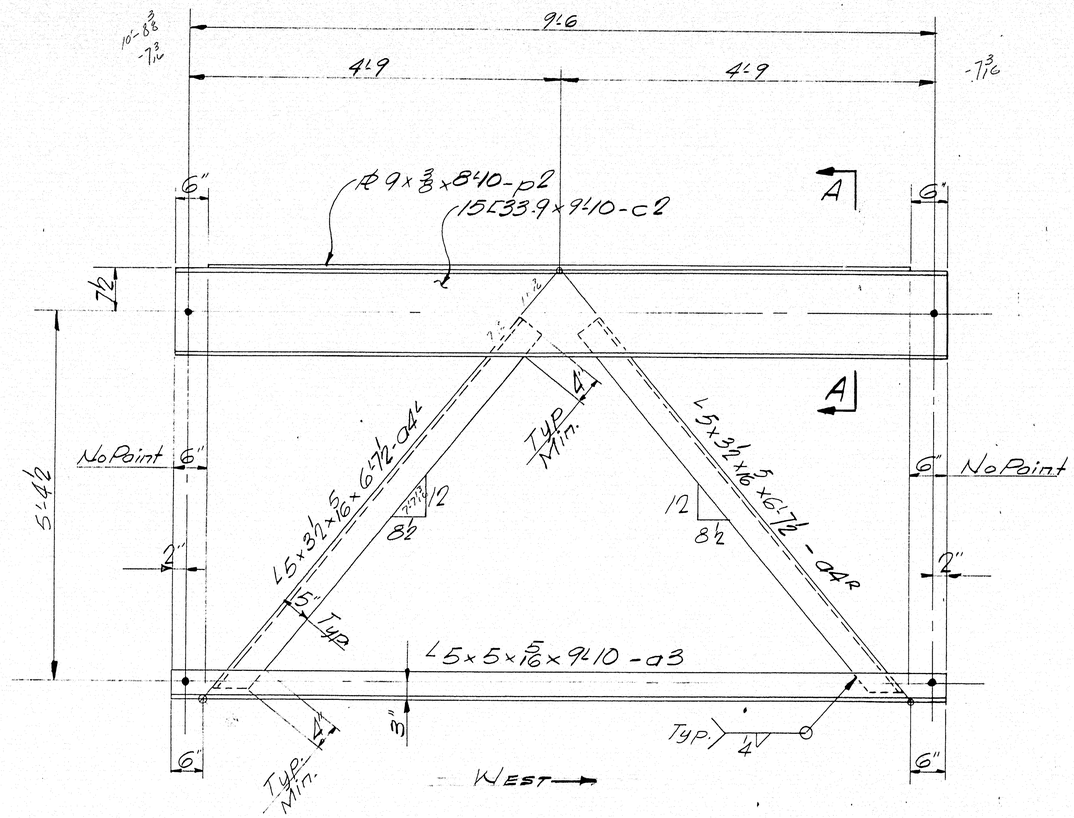

FRAME A1B - 2 REQ'D.

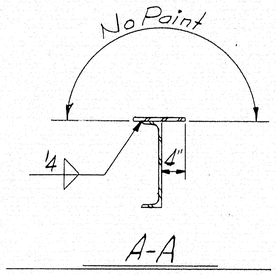

Quantities shown are for One Bridge
Add suffix N to marks for Northbound Bridge (Bill of Mat. 524N)
do S do do Southbound Bridge (Bill of Mat. 524S)

PROJ. No. I-95-9(29)
SHOP CONNECTIONS: Welded
FIELD CONNECTIONS: Temp Bolts-Welded
HOLES: 15/16" Φ
PAINT: Per Maine Specs.

N.B.&S.B. BRIDGES
CROSS FRAME - A1B
Bancroft & Martin Inc.
South Portland 7, Maine
I-95 OVER PENOBSCOT RIVER
MEDWAY, MAINE

DRAWN	4-14-65	J.R.F.
REVISION		
REVISION		
REVISION		

CUSTOMER CALLAHAN BROS INC.
DESIGNER MAINE S.H.C. BRIDGE DIV.
ORDER NO. VERBAL
DWG. NO. 65-19-524

APP. 9-1-65

98-55

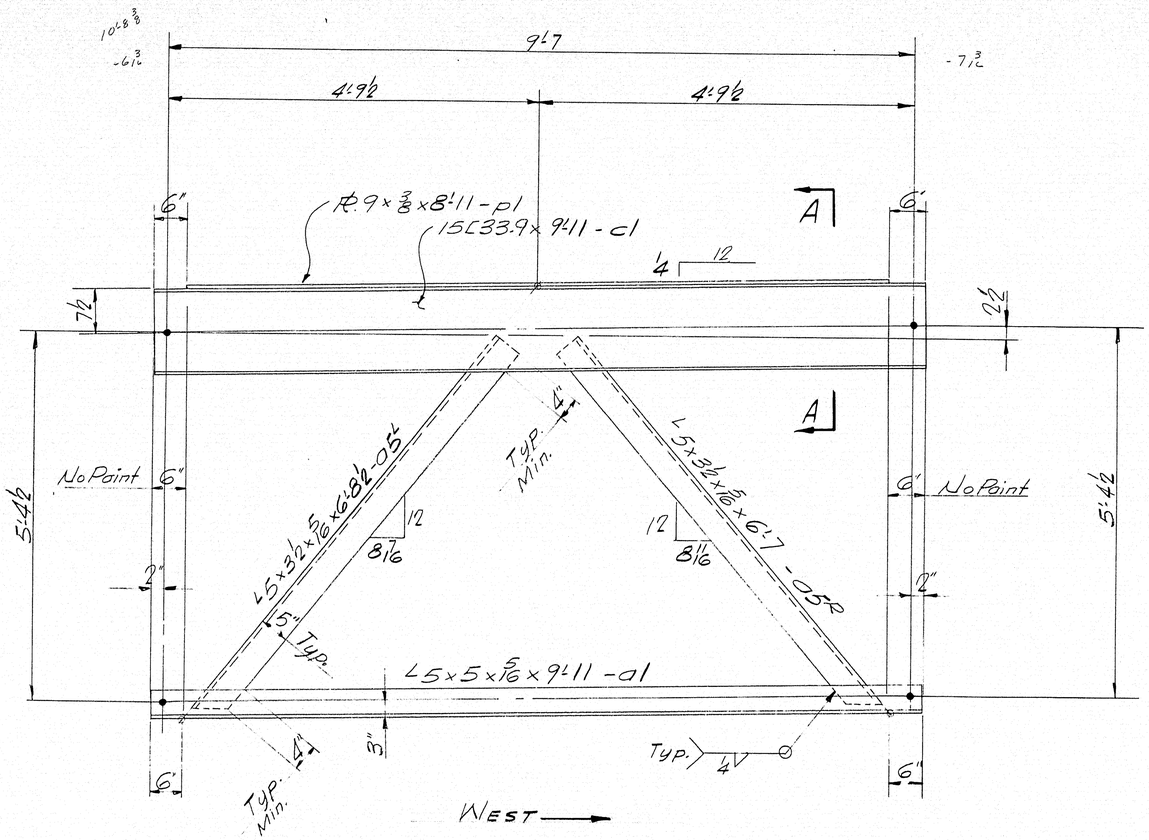

FRAME A1C - 2 REQ'D.

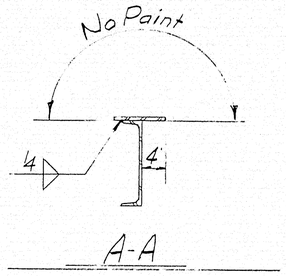

A-A

Quantities shown are for One Bridge
Add suffix N to marks for Northbound Bridge (Bill of Mat. S25N)
do S do do Southbound Bridge (Bill of Mat. S25S)

PROJ. No. I-95-9(29)
SHOP CONNECTIONS: Welded
FIELD CONNECTIONS: Temp Bolts. Welded
HOLES: 15/16" Ø
PAINT: Per Maine Specs.

~~N.B. & S.B. BRIDGES~~	
CROSS FRAME - A1C	
Bancroft & Martin Inc. South Portland 7, Maine	
I-95 OVER PENOBSCOT RIVER MEDWAY, MAINE	
CUSTOMER CALLAHAN BROS. INC. / DESIGNER MAINE S.H.C. BRIDGE DIV.	
ORDER NO. VERBAL	DWG. NO. 65-19-S25

APP 9-1-65

DRAWN	4-14-65	J.P.F.
REVISION		
REVISION		
REVISION		

98-56

8500 M.J.C

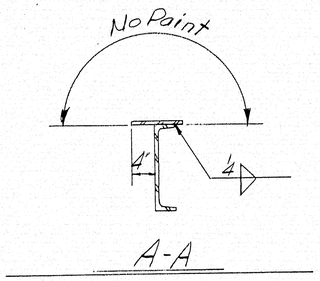

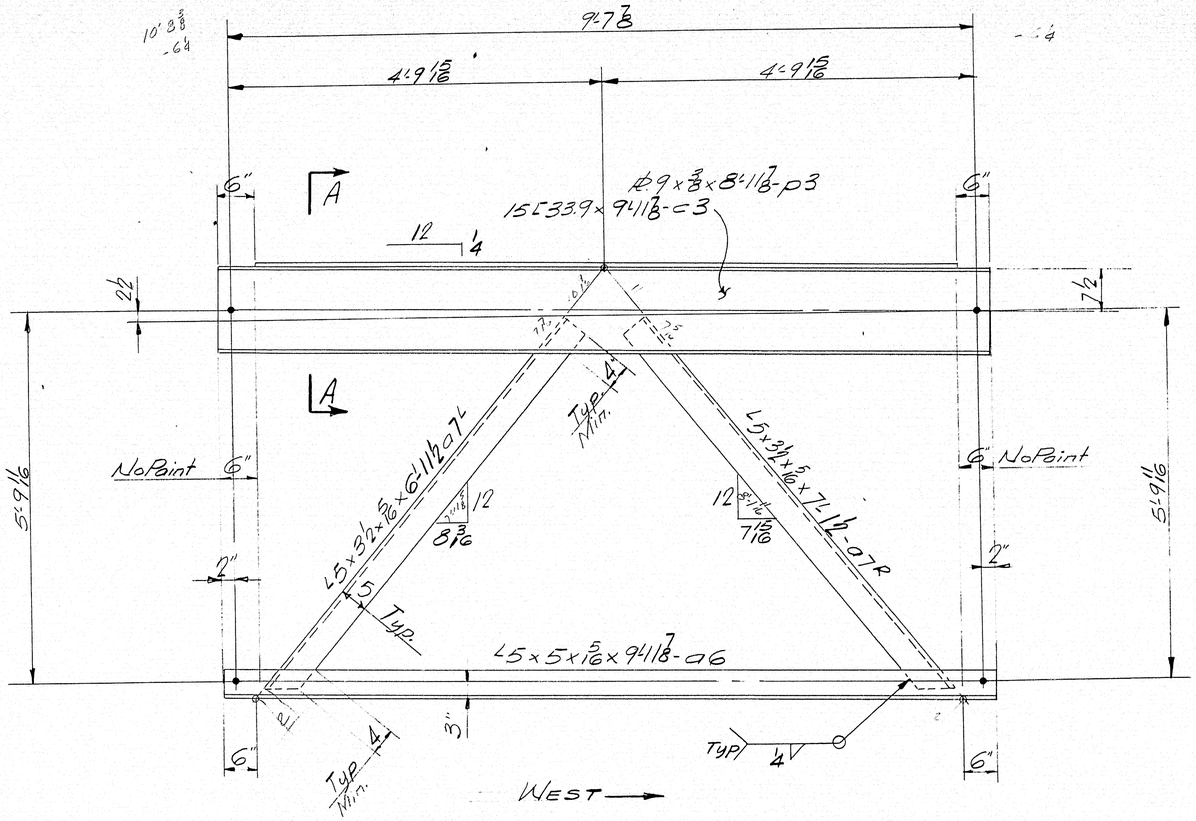

FRAME A2A - 8 REQ'D.

Quantities shown are for One Bridge
Add suffix N to marks for Northbound Bridge (Bill of Mat. 526N)
do S do do Southbound Bridge (Bill of Mat. 526S)

Prov. No. I-95-9(29)
SHOP CONNECTIONS: Welded
FIELD CONNECTIONS: Temp. Bolts - Welded
HOLES: 13/16" ⌀
PAINT: Per Maine Specs.

N.B. & S.B. BRIDGES

CROSS FRAME - A2A

Bancroft & Martin Inc.
South Portland 7, Maine

I-95 OVER PENOBSCOT RIVER
MEDWAY, MAINE

CUSTOMER: CALLAHAN BROS. INC.
DESIGNER: MAINE S.H.C. BRIDGE DIV.

DRAWN	4-14-65	J.P.F.	
REVISION			
REVISION			
REVISION			

ORDER NO. VERBAL
DWG. NO. 65-19-526

APR 9-1-65

98-57

0 1 2 3 4 5 INCHES

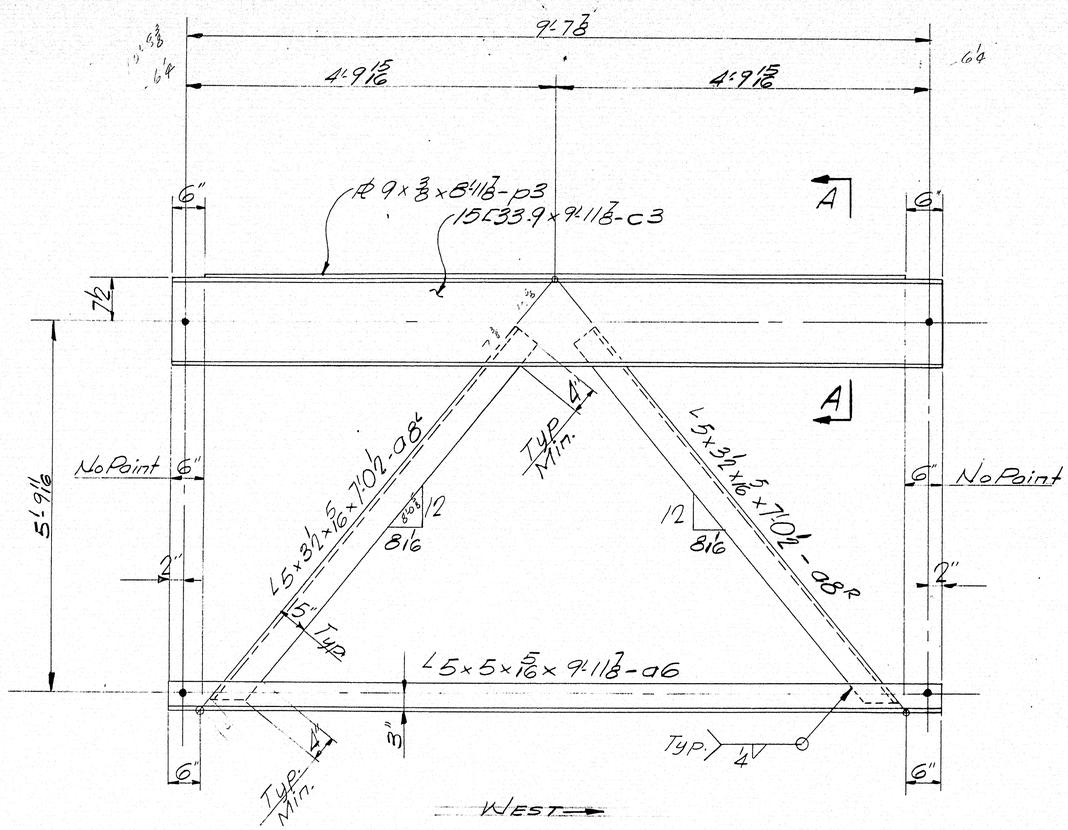

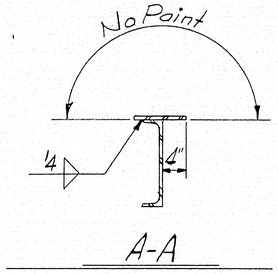

FRAME-A2B-8 REQ'D.

Quantities shown are for One Bridge
Add suffix N to marks for Northbound Bridge (Bill of Mat. S27N)
do S do do. Southbound Bridge (Bill of Mat. S27S)

PROJ. No. I-95-9(29)
SHOP CONNECTIONS: Welded
FIELD CONNECTIONS: Temp Bolts-Welded
HOLES: 15/16" ϕ
PAINT: Per Maine Specs.

N.B. & S.B. BRIDGES

CROSS FRAME - A2B

Bancroft & Martin Inc.
South Portland 7, Maine

I-95 OVER PENOBSCOT RIVER
MEDWAY, MAINE

CUSTOMER: CALLAHAN BROS. INC.
DESIGNER: MAINE S.H.C. BRIDGE DIV.

ORDER NO. VERBAL | DWG. NO. 65-19-527

DRAWN	4-14-65	J.R.F.
REVISION		
REVISION		
REVISION		

APR 9-1-65

98-58

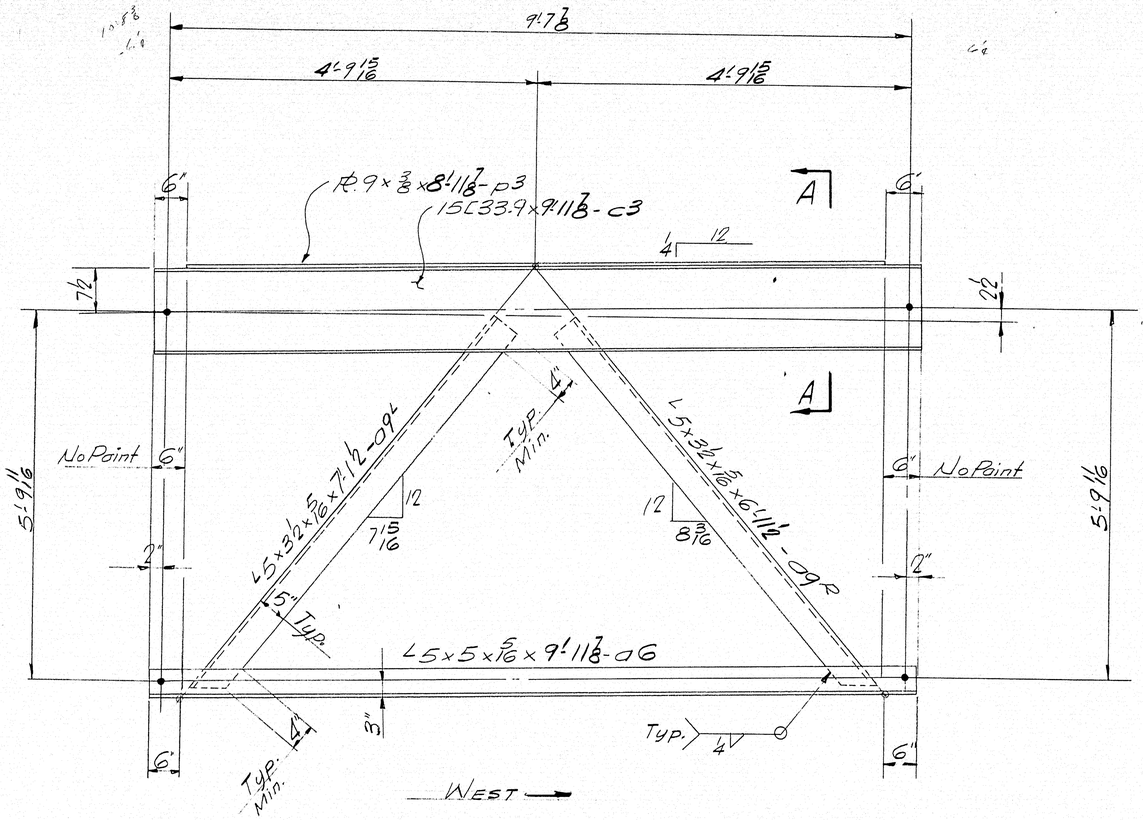

FRAME A2C - 8 REQ'D.

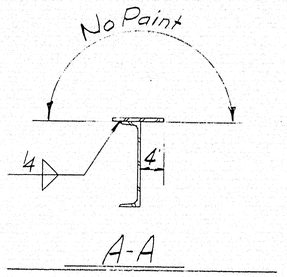

A-A

Quantities shown are for One Bridge
Add suffix N to marks for Northbound Bridge (Bill of Mat. 528N)
do S do do Southbound Bridge (Bill of Mat. 528S)

PROJ. No. I-95-9(29)
SHOP CONNECTIONS: Welded
FIELD CONNECTIONS: Temp. Bolts - Welded
HOLES: 13/16" Ø
PAINT: Per Maine Specs.

N.B. & S.B. BRIDGES

CROSS FRAME - A2C

Bancroft & Martin Inc.
South Portland 7, Maine

I-95 OVER PENOBSCOT RIVER
MEDWAY, MAINE

APP 9-1-65

DRAWN	4-14-65	J.P.F.
REVISION		
REVISION		
REVISION		

CUSTOMER CALLAHAN BROS. INC.
DESIGNER MAINE S.H.C. BRIDGE DIV.
ORDER NO. VERBAL
DWG. NO. 65-19-S78

98-59

0 1 2 3 4 5 INCHES

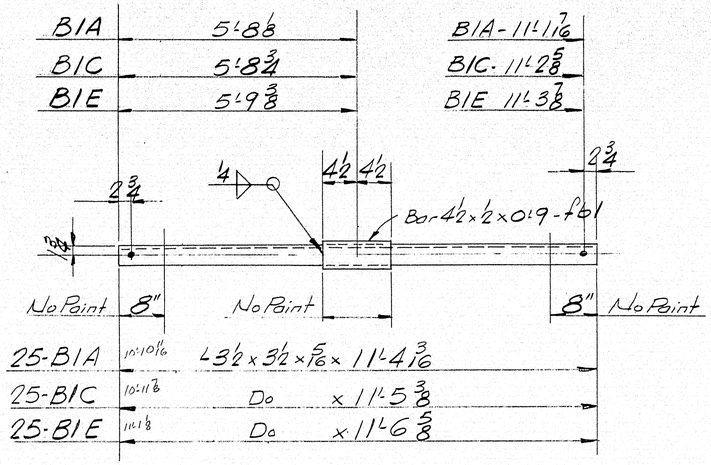

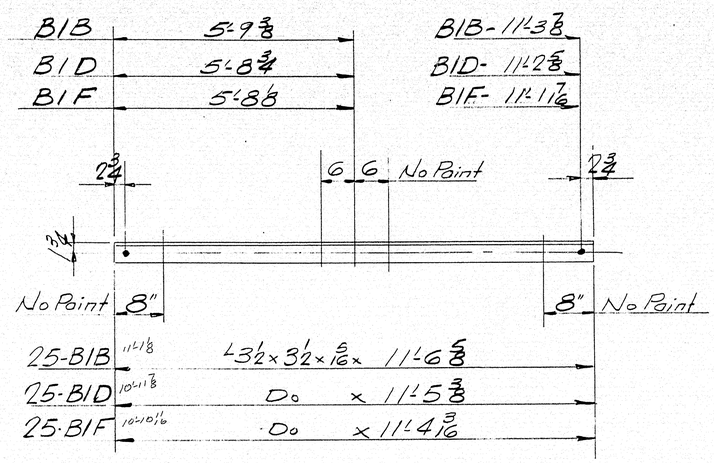

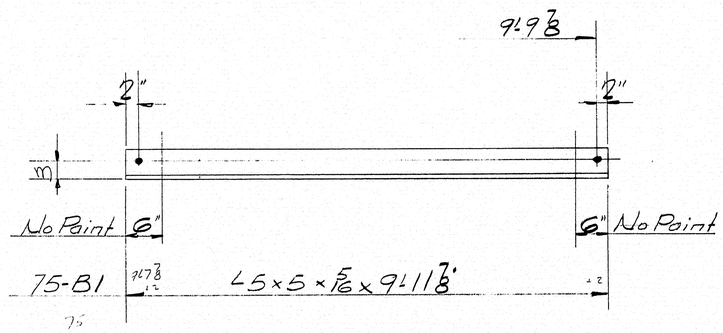

Quantities shown are for One Bridge
Add suffix N to marks for Northbound Bridge (Bill of Mat. 529N)
do S do do Southbound Bridge (Bill of Mat. 529S)

PROJ. No. I-95-9-(29)
SHOP CONNECTIONS: Welded
FIELD CONNECTIONS: Temp. Bolts-Welded
HOLES: 13/16" ϕ
PAINT: Per Maine Specs.

N. B. & S. B. BRIDGES
CROSS FRAME-TYPE B1
Bancroft & Martin Inc.
South Portland 7, Maine
I-95 OVER PENOBSCOT RIVER
MEDWAY, MAINE
CUSTOMER CALLAHAN BROS INC.
DESIGNER MAINE S.H.C. BRIDGE DIV.
ORDER NO. VERBAL
DWG. NO. 65-19-529

DRAWN	7-14-65	J.P.F.
REVISION		
REVISION		
REVISION		

APP. 9-1-65

98-60

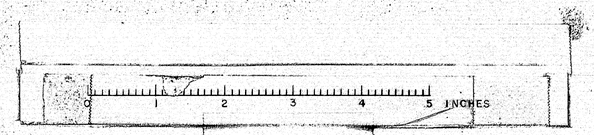

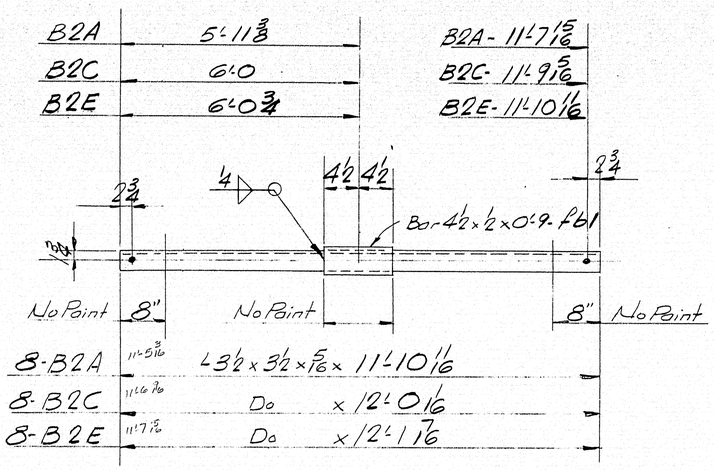

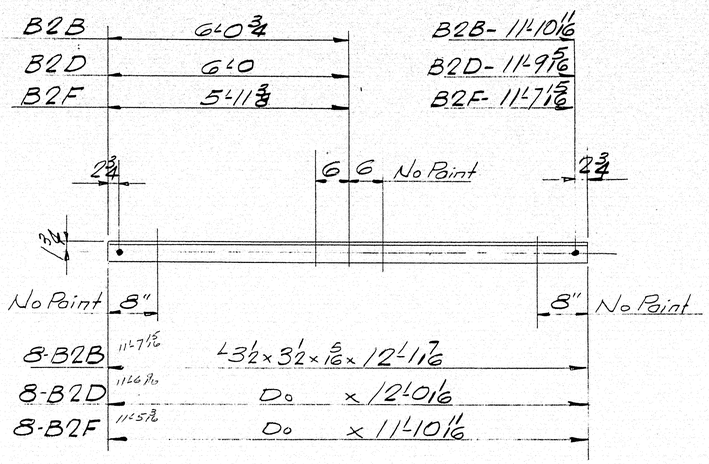

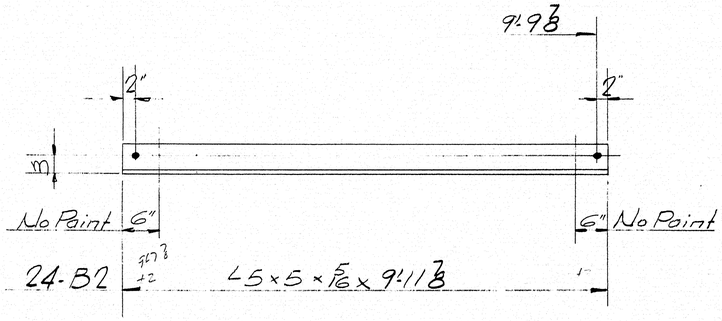

Quantities shown are for One Bridge
Add suffix N to marks for Northbound Bridge (Bill of Mat. 530N)
do S do do Southbound Bridge (Bill of Mat. 530S)

PROJ. No. I-95-9(29)

SHOP CONNECTIONS: Welded
FIELD CONNECTIONS: Temp. Bolts-Welded
HOLES: 13/16" d
PAINT: Per Maine Specs.

~~N.B. & S.B. BRIDGES~~

CROSS FRAME-TYPE B2

Bancroft & Martin Inc.
South Portland 7, Maine

I-95 OVER PENOBSCOT RIVER
MEDWAY, MAINE

APR 9-1-65

DRAWN	4-14-65	J.P.F.
REVISION		
REVISION		
REVISION		

CUSTOMER CALLAHAN BROS. INC.
DESIGNER: MAINE S.H.C. BRIDGE DIV.
ORDER NO. VERBAL
DWG. NO. 65-19-530

98-61

8503 .M.J.R

0 1 2 3 4 5 INCHES

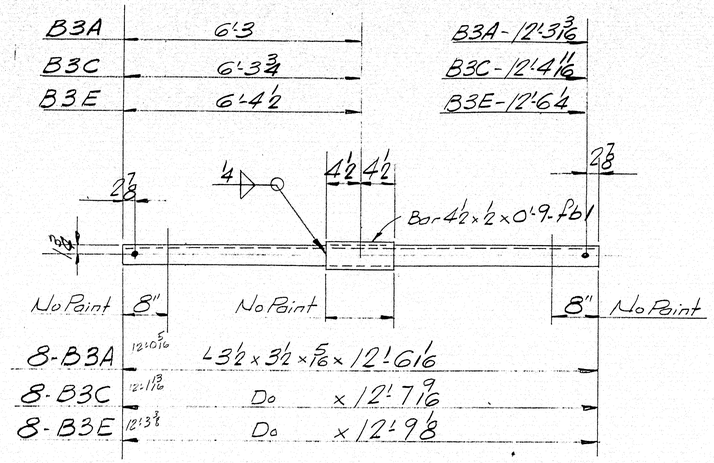

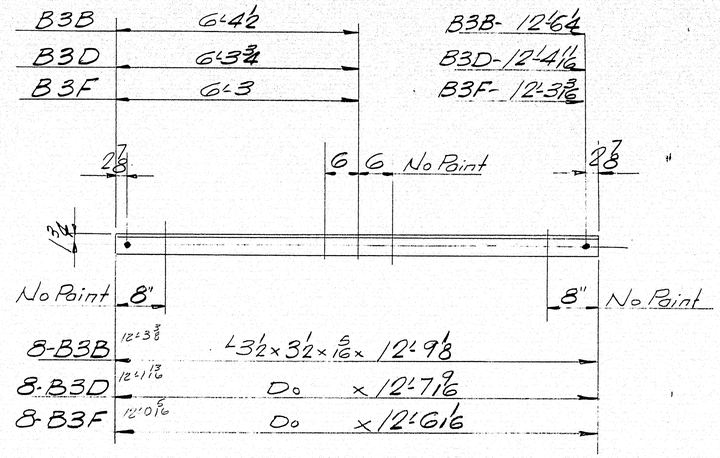

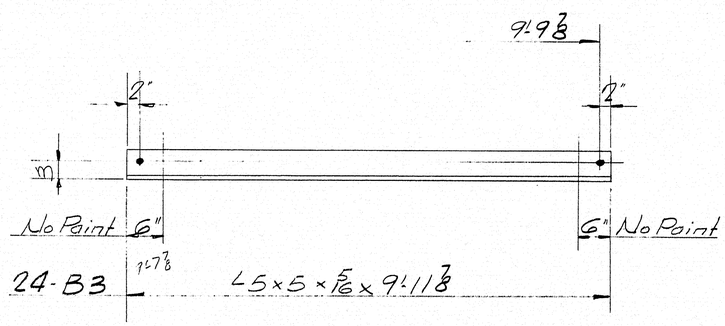

Quantities shown are for One Bridge
Add suffix N to marks for Northbound Bridge (Bill of Mat. 531N)
do S do do Southbound Bridge (Bill of Mat. 531S)

Proj. No. I-95-9(29)
SHOP CONNECTIONS: Welded
FIELD CONNECTIONS: Temp. Bolts-Welded
HOLES: 15/16" ϕ
PAINT: Per Maine Specs.

N.B. & S.B. BRIDGES.

CROSS FRAME-TYPE B3

Bancroft & Martin Inc.
South Portland 7, Maine

I-95 OVER PENOBSCOT RIVER
MEDWAY, MAINE

APP. 9-1-65

DRAWN	4-14-65	J.P.F.	CUSTOMER GALLAHAN BROS. INC.
REVISION			DESIGNER MAINE S.H.C. BRIDGE DIV.
REVISION			
REVISION			ORDER NO. VERBAL DWG. NO. 65-19-531

98-62

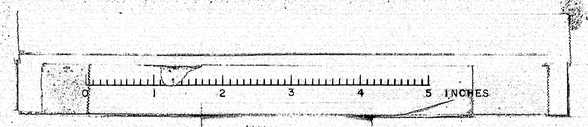

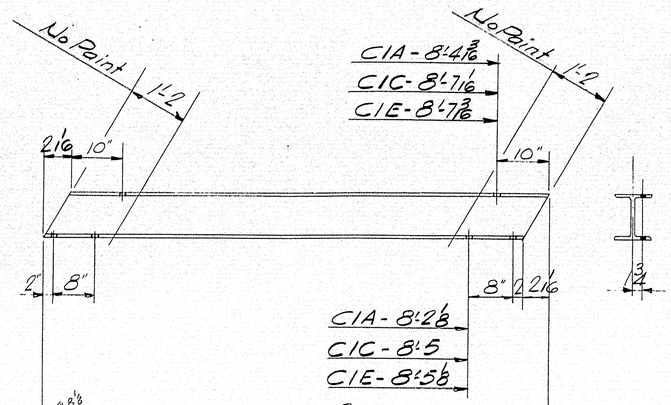

4-C1A	8'-8 1/8	8WF24 x 9'-2 3/16
4-C1C	8'-11	Do x 9'-5 1/16
4-C1E	8'-11 1/8	Do x 9'-5 3/16

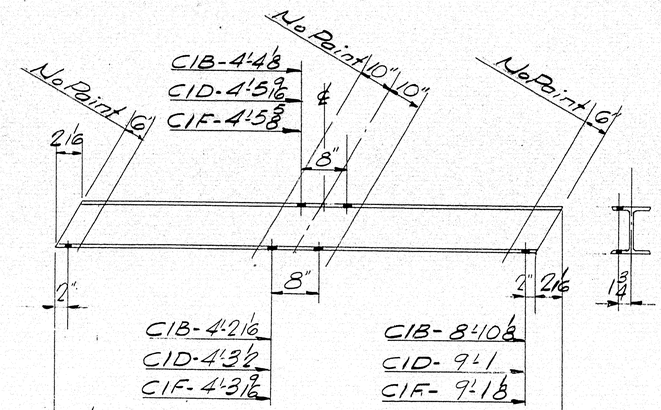

4-C1B	8'-8 1/8	8WF24 x 9'-2 3/16
4-C1D	8'-11	Do x 9'-5 1/16
4-C1F	8'-11 1/8	Do x 9'-5 3/16

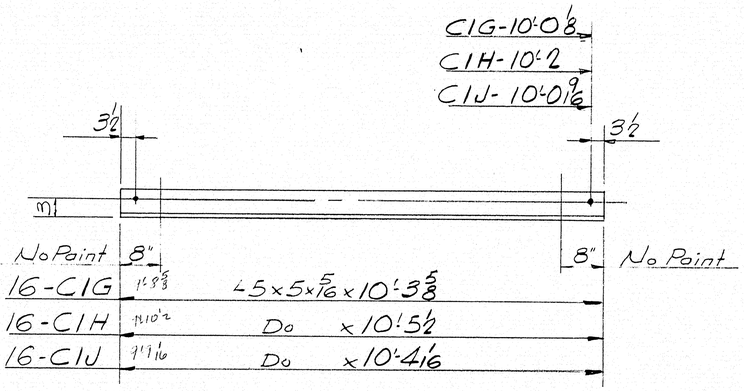

16-C1G	1'-8 5/8	∠5 x 5 x 5/16 x 10'-3 5/8
16-C1H	1'-10 1/2	Do x 10'-5 1/2
16-C1J	1'-9 1/16	Do x 10'-4 1/16

Quantities shown are for One Bridge
Add suffix N. to marks for Northbound Bridge (Bill of Mat. 532N)
do S do do Southbound Bridge (Bill of Mat. 532S)

PROJ. No. I-95-9(29)

SHOP CONNECTIONS:
FIELD CONNECTIONS: Temp. Bolts-Welded
HOLES: 15/16" ϕ
PAINT: Per Maine Specs.

~~N.B.&S.B. BRIDGES~~

CROSS FRAME - TYPE C1

Bancroft & Martin Inc.
South Portland 7, Maine

I-95 OVER PENOBSCOT RIVER
MEDWAY, MAINE

APR 9-1-65

DRAWN	4-15-65	J.P.F.
REVISION		
REVISION		
REVISION		

CUSTOMER CALLAHAN BROS. INC.
DESIGNER MAINE S.H.C. BRIDGE DIV.
ORDER NO. VERBAL
DWG. NO. 65-19-532

98-63

8503 .M.J.E

0 1 2 3 4 5 INCHES

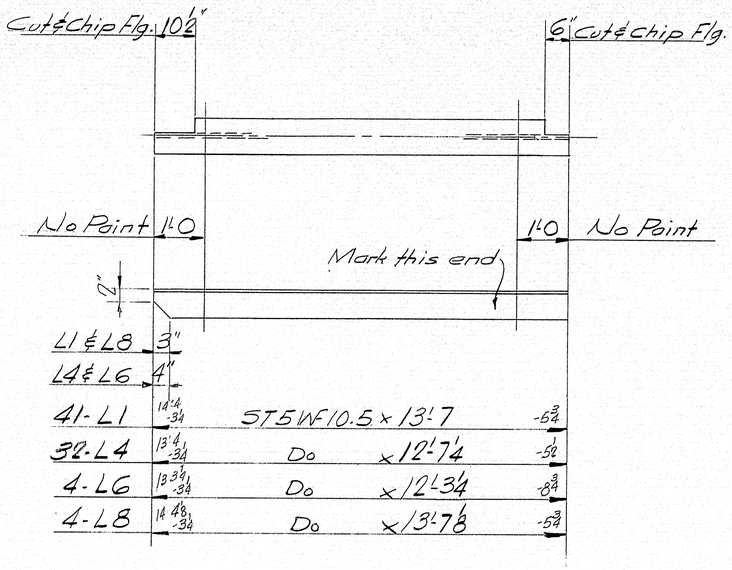

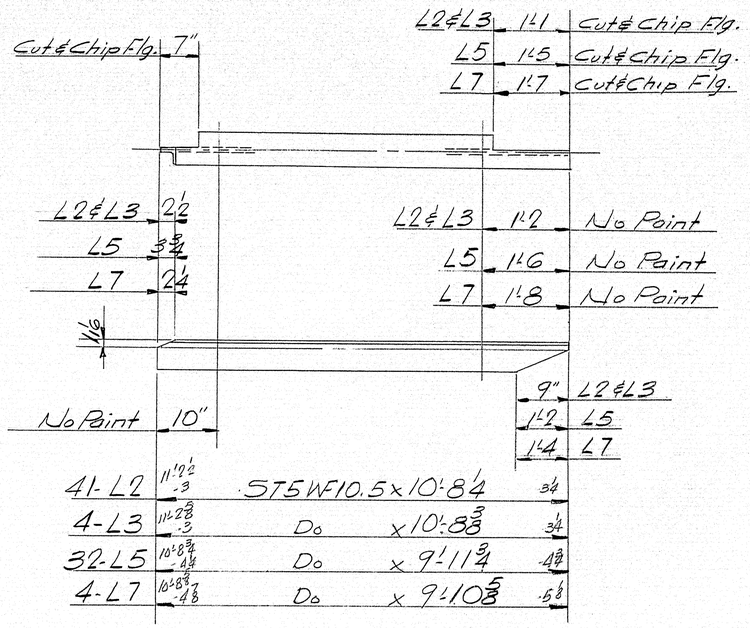

Quantities shown are for One Bridge
Add suffix N to marks for Northbound Bridge (Bill of Mat. 533N)
do do S do do Southbound Bridge (do do 533S)

PROJ. No. I-95-9(29)

N.B. & S.B. BRIDGES

LATERAL BRACING

Bancroft & Martin Inc.
South Portland 7, Maine

I-95 OVER PENOBSCOT RIVER
MEDWAY, MAINE

APP. 9-1-65

DRAWN	4-30-65	J.P.F.
REVISION		
REVISION		
REVISION		

CUSTOMER CALLAHAN BROS. INC.
DESIGNER MAINE S.H.C. BRIDGE DIV.
ORDER NO. VERBAL DWG. NO. 65-19-533

98-64

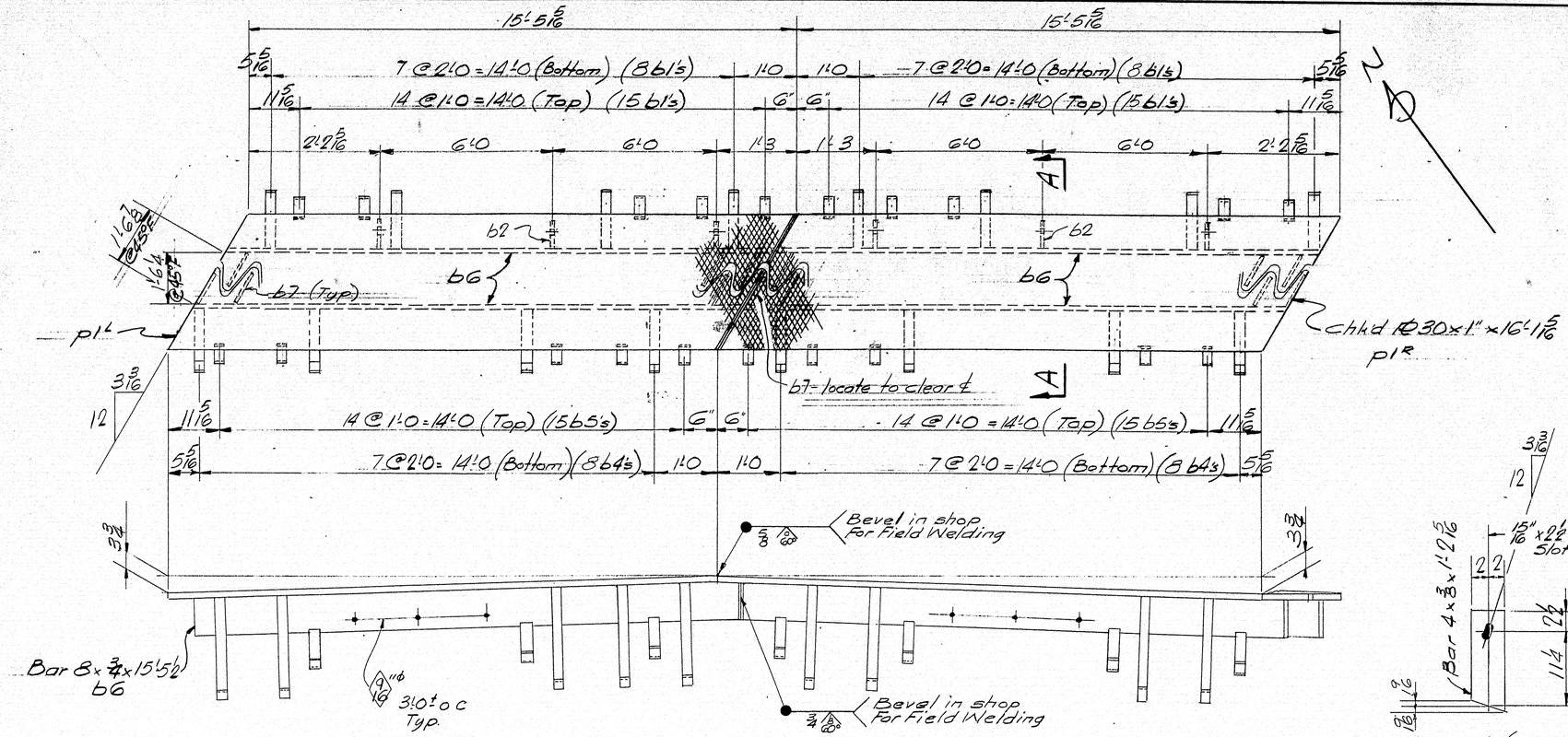

ED1-ONE REQ'D.

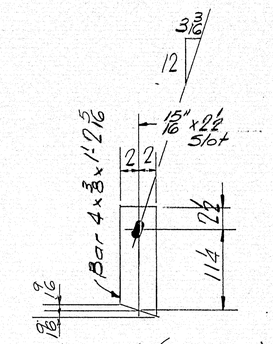

b3 Det. (No Point)
Bolt to b2 for ship.
Use 3/8" H.S. Bolts x 2 1/4"

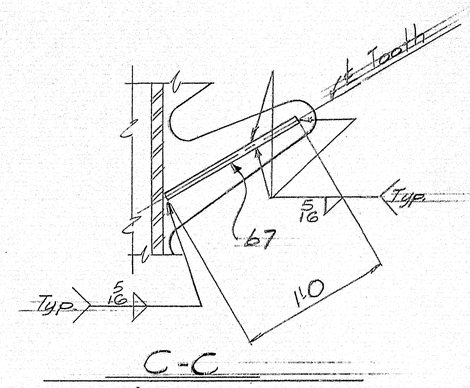

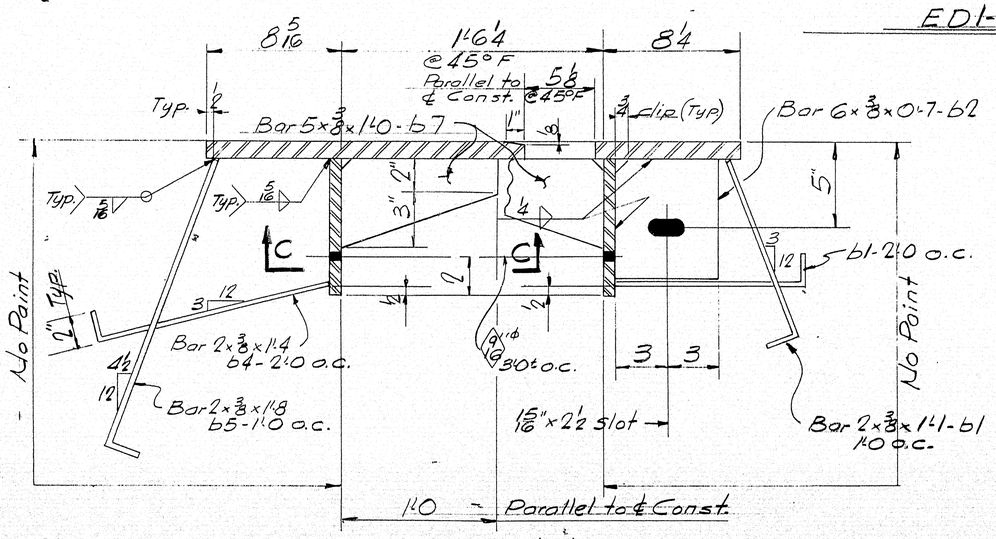

SECTION A-A

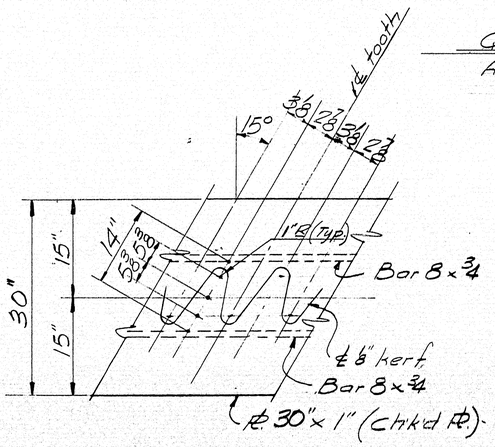

CUTTING DETAIL
Match Mark

Quantities shown are for One Bridge
Add suffix N to marks for Northbound Bridge (Bill of Mat. 534N)
do S do do Southbound Bridge (do do 534S)

SHOP CONNECTIONS: Welded-Bolted
FIELD CONNECTIONS: Welded-Bolted
HOLES: As Noted
PAINT: Red Lead Per Maine Specs.

N.B. & S.B. BRIDGES
EXPANSION DAM ABUT. #1
Bancroft & Martin Inc.
South Portland 7, Maine
I-95 OVER PENOBSCOT RIVER
MEDWAY, MAINE

CUSTOMER Callahan Bros. Inc.
DESIGNER Maine S.H.C. Bridge Div.

DRAWN	6-17-65	J.P.F.
REVISION	--	
REVISION		
REVISION		

Proj. No. I-95-9(29)

ORDER NO. VERBAL
DWG. NO. 65-19-534

APR 9-10-65

98-65

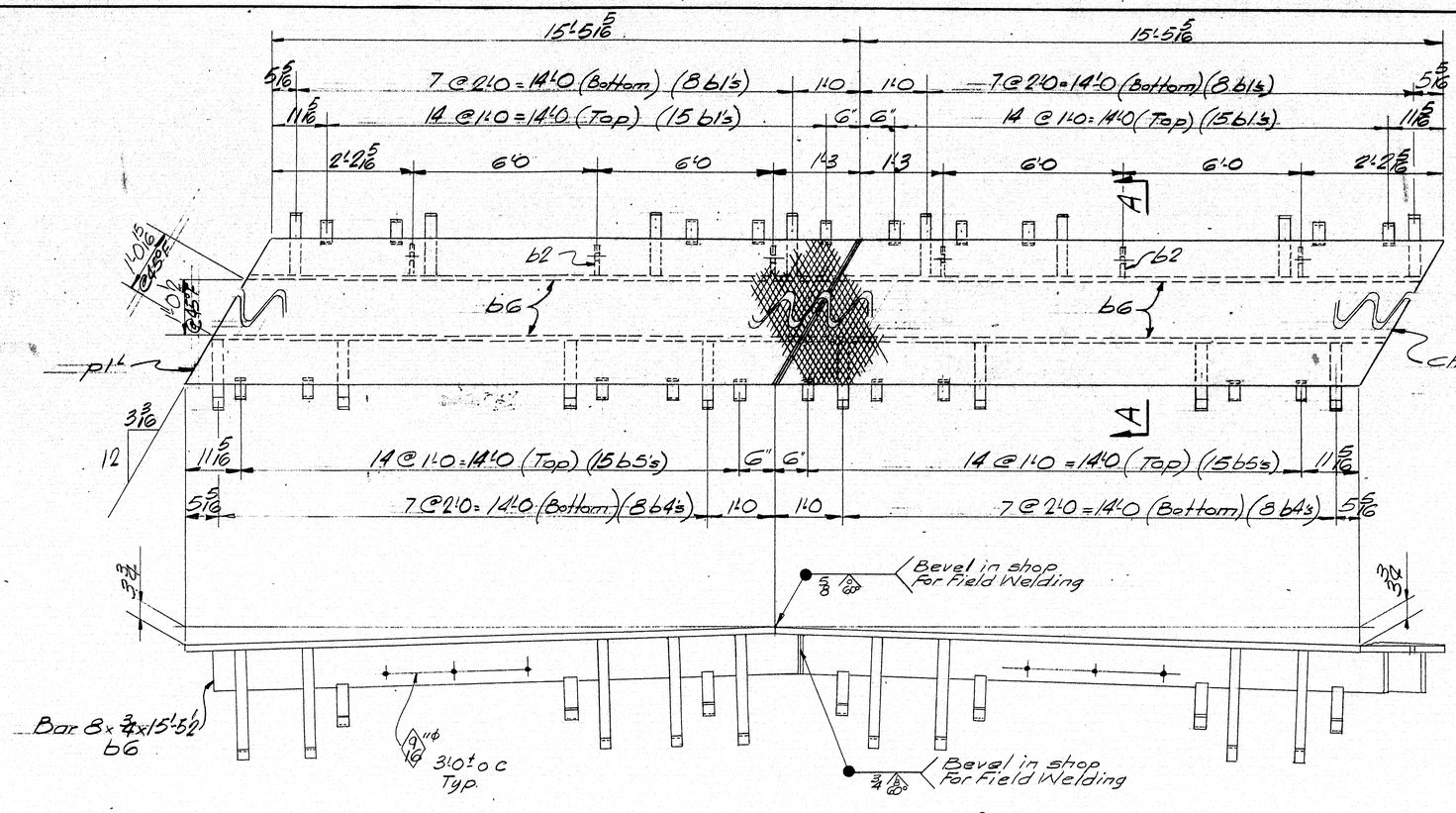

ED2 - ONE REQ'D.

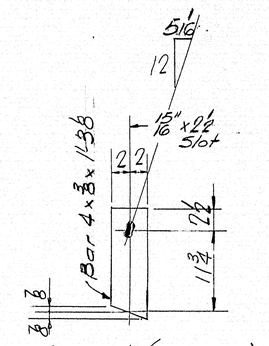

b3-Det. (No Point)
Bolt to b2 for ship.
Use 3/8"ϕ H.S. Bolts x 2 1/4"

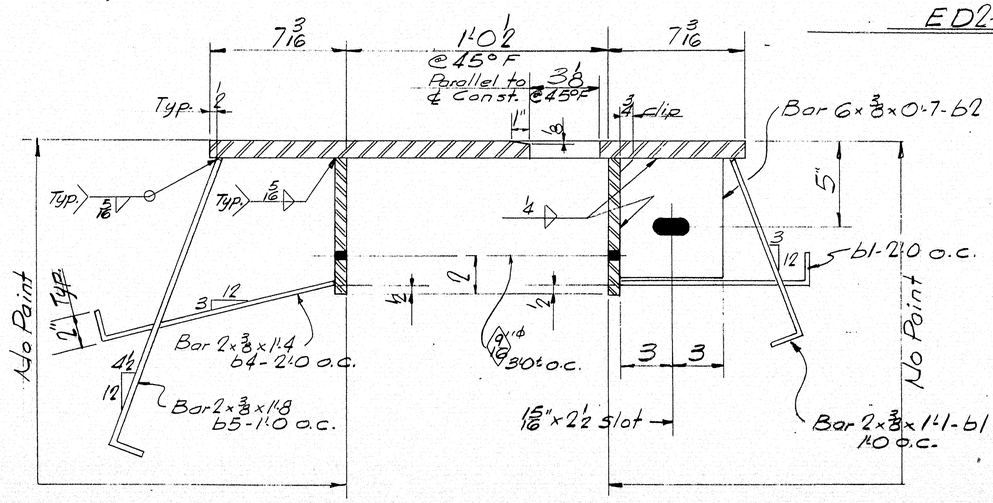

SECTION A-A

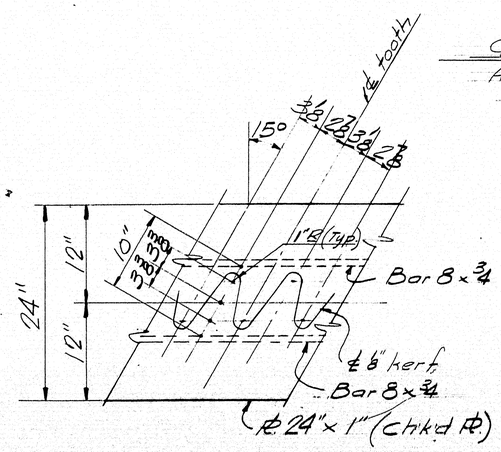

CUTTING DETAIL
Match Mark

Quantities shown are for One Bridge
Add suffix N to marks for Northbound Bridge (Bill of Mat. 535N)
do S do do Southbound Bridge (do do 535S)

SHOP CONNECTIONS: Welded-Bolted
FIELD CONNECTIONS: Welded-Bolted
HOLES: As Noted
PAINT: Red Lead ~~Per Maine Specs.~~

N.B. & S.B. BRIDGES
EXPANSION DAM ABUT. #2
Bancroft & Martin Inc.
South Portland 7, Maine
I-95 OVER PENOBSOT RIVER
MEDWAY, MAINE

APP 9-10-65

DRAWN 6-7-65 J.P.F.
REVISION
REVISION
REVISION

PROJ. No. I-95-9(29)

CUSTOMER CALLAHAN BROS. INC.
DESIGNER MAINE S.H.C. BRIDGE DIV.
ORDER NO. VERBAL
DWG. NO. 65-19-535

98-66

0 1 2 3 4 5 INCHES

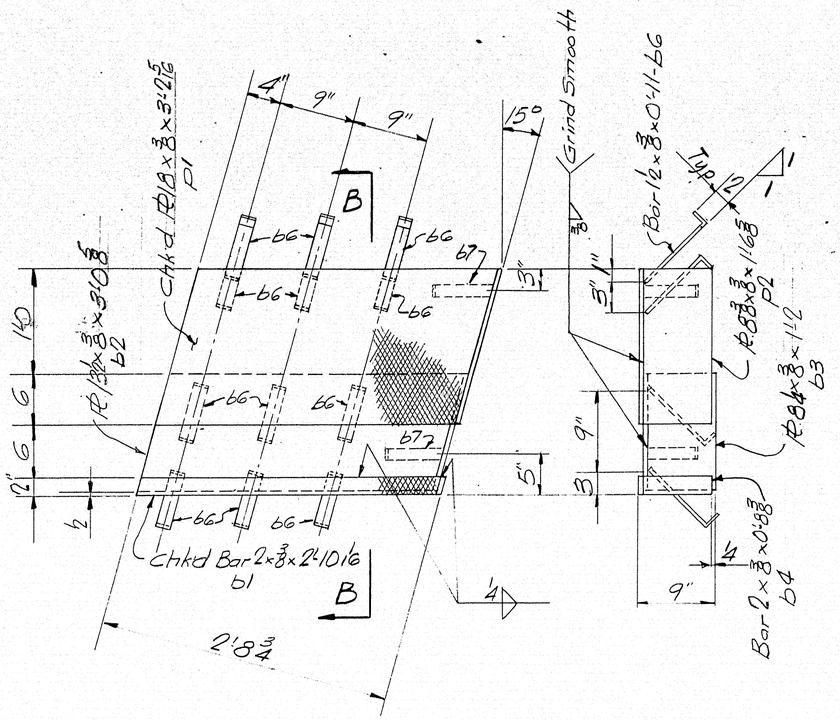

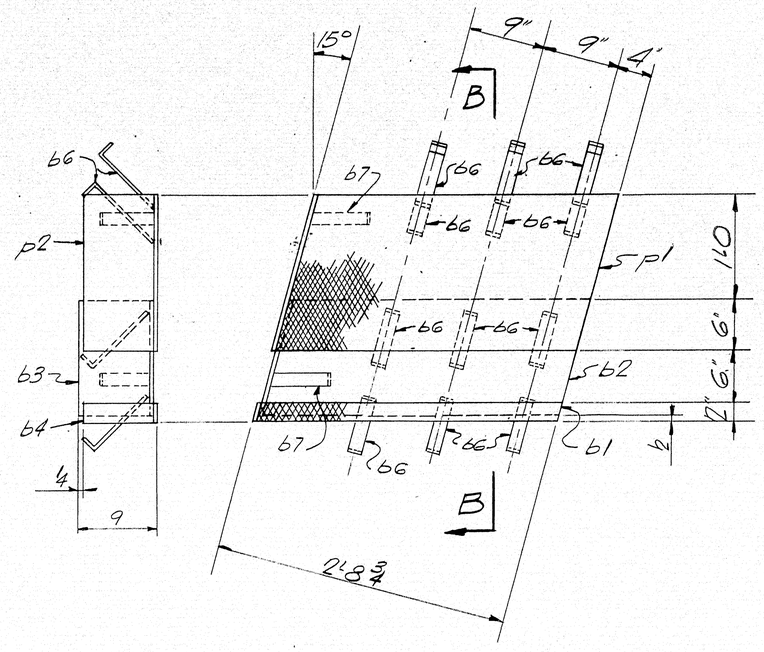

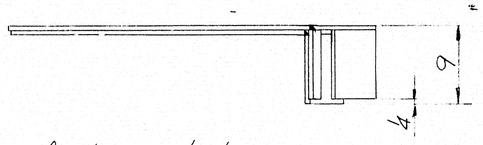

Anchors not shown

SD1L - ONE REQ'D.

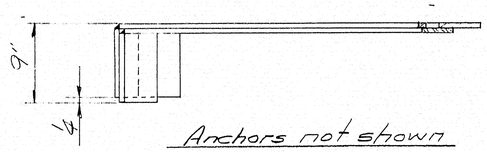

Anchors not shown

SD1R - ONE REQ'D.

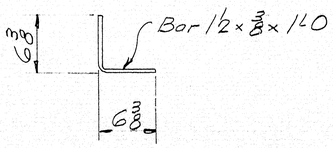

67 - Detail

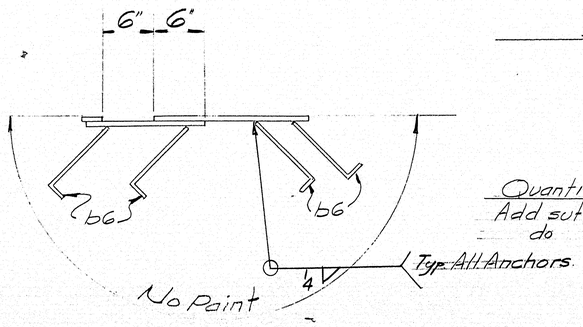

B-B

Quantities shown are for One Bridge
Add suffix N to marks for Northbound Bridge (Bill of Mat. 536N)
do S do do Southbound Bridge (Bill of Mat. 536S)

SHOP CONN: Welded
PAINT: Red Lead Per Maine Specs
PROJ. No. I-95-9(29)

N.B. & S.B. BRIDGES

SIDEWALK DAMS - ABUT. #1

Bancroft & Martin Inc.
South Portland 7, Maine

I-95 OVER PENOBSCOT RIVER
MEDINBKY - MAINE

CUSTOMER CALLAHAN BROS. INC.
DESIGNER MAINE S.H.C. BRIDGE DIV.
ORDER NO. VERBAL
DWG. NO. 65-19-536

APP. 9-10-65

DRAWN	6-18-65	J.P.R.
REVISION		
REVISION		
REVISION		

98-67

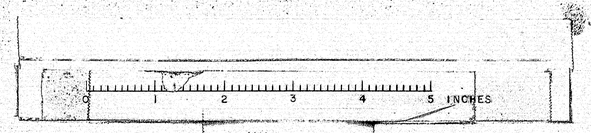

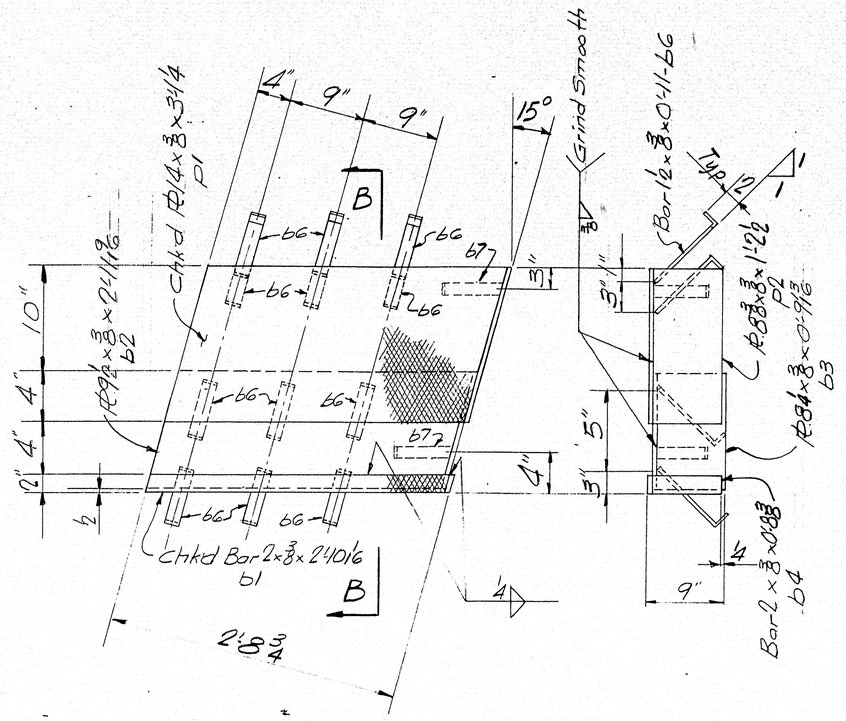

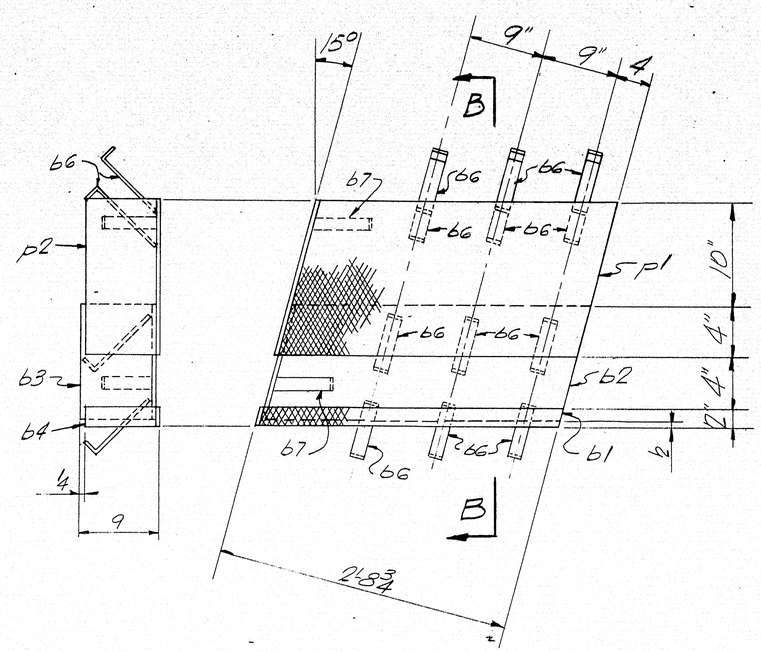

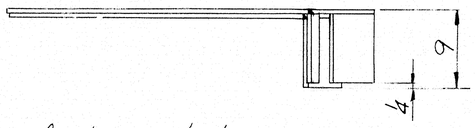

Anchors not shown

SD2L - ONE REQ'D.

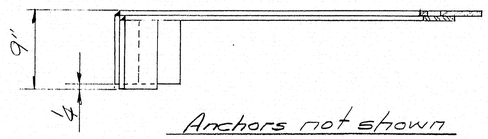

Anchors not shown

SD2R - ONE REQ'D.

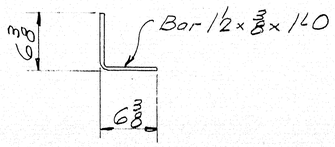

b7 - Detail

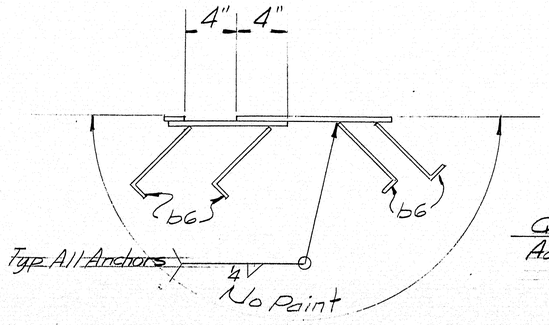

B-B

Quantities shown are for One Bridge
Add suffix N to marks for Northbound Bridge (Bill of Mat. 537N)
do S do do Southbound Bridge (Bill of Mat. 537S)

SHOP CONN: Welded
PAINT: Red Lead Per Maine Specs
PROJ. No I-95-2(39)

N. B. & S. B. BRIDGES.

SIDEWALK DAMS - ABUT. #2

Bancroft & Martin Inc.
South Portland 7, Maine

I-95 OVER PENOBSCOT RIVER
MEDWAY, MAINE

CUSTOMER CALLAHAN BROS. INC.
DESIGNER MAINE S.H.C. BRIDGE DIV.

DRAWN	6-18-65	J.P.F.
REVISION		
REVISION		
REVISION		

ORDER NO. VERBAL
DWG. NO. 65-19-537

APP 9/10/65

98-68

0 1 2 3 4 5 INCHES